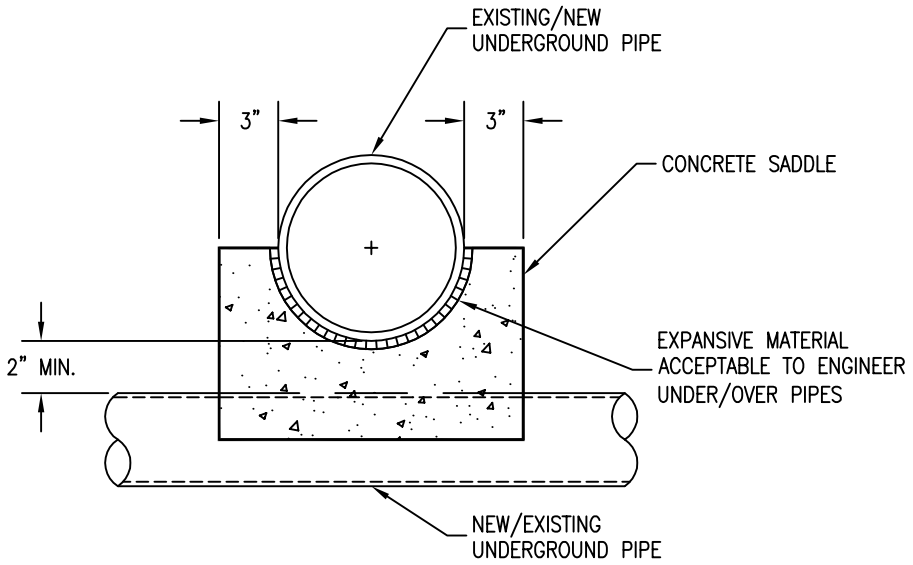

FRONT ELEVATION VIEW
NO SCALE

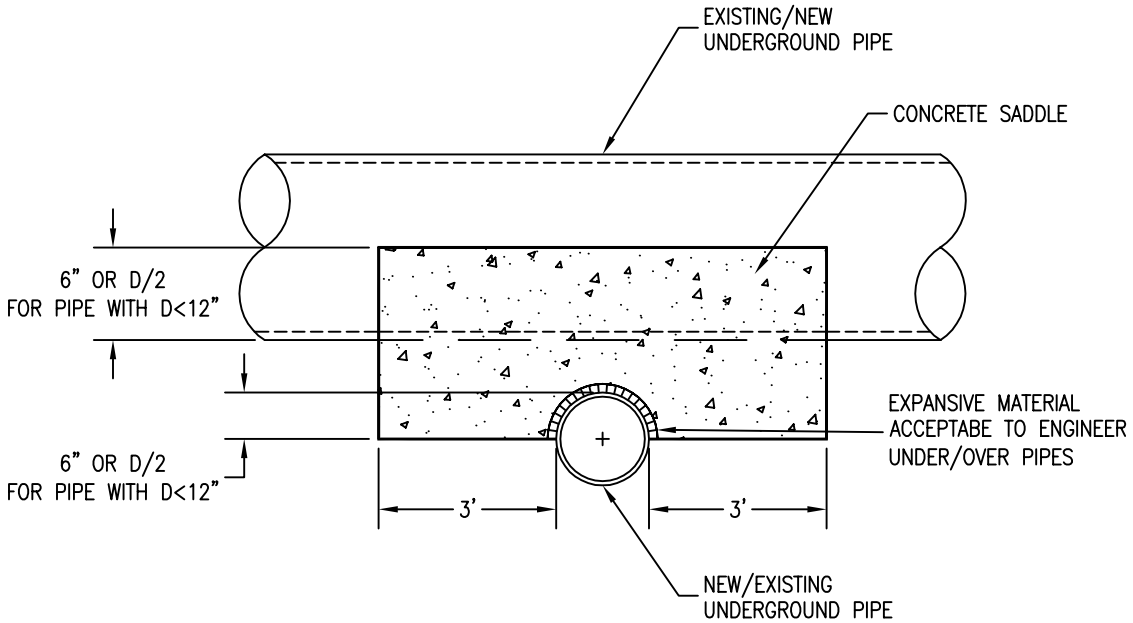

SIDE ELEVATION VIEW
NO SCALE

NOTES:

1. INSTALL CONCRETE SADDLE AT EACH LOCATION WHERE A NEW UNDERGROUND UTILITY CROSSES AN EXISTING UNDERGROUND UTILITY WITH LESS THAN 12" CLEARANCE.
2. MINIMUM ALLOWABLE CLEARANCE IS 2".
3. USE CLASS "A" (AKA CLASS I) CONCRETE.

DRAWN BY: M. LEE	CONCRETE SADDLE	MI-7
CHECKED BY: B. TRAN		
APPROVED BY: G. GOMEZ		
DATE: DECEMBER 2002	CITY OF SANTA CLARA	PAGE: 74