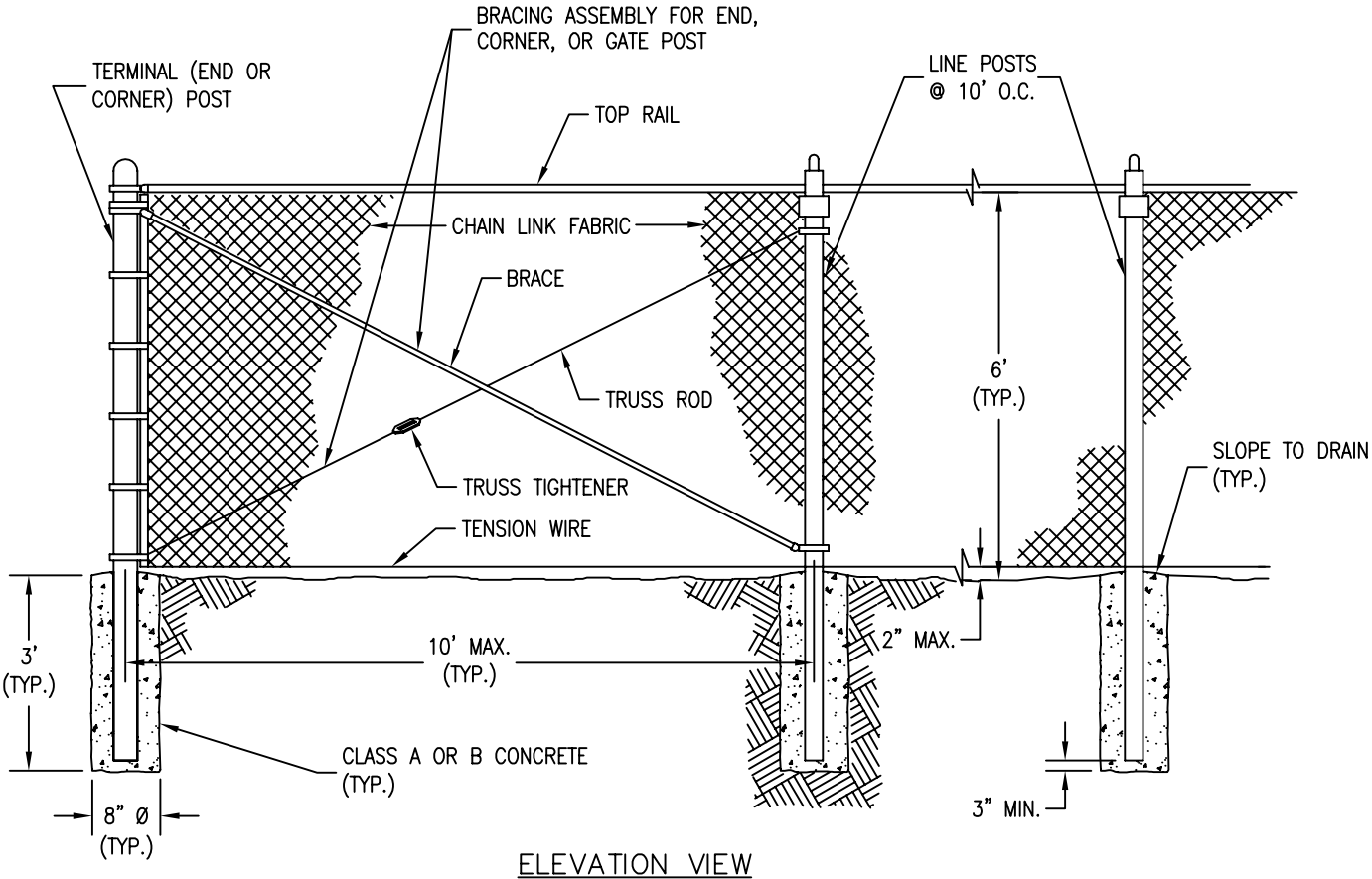

ELEVATION VIEW
NO SCALE

NOTES:

1. ALL MATERIALS AND CONSTRUCTION SHALL CONFORM TO CALTRANS REQUIREMENTS FOR CHAIN LINK FENCE AS SPECIFIED IN SECTION 80–4 OF THE STANDARD SPECIFICATION (JULY 1992) EXCEPT THAT IN LIEU OF TOP TENSION WIRE, TOP RAIL SHALL BE USED. TOP RAIL SHALL BE GALVANIZED STEEL PIPE NOT LESS THAN 1.63" OUTSIDE DIA. AND WEIGHING NOT LESS THAN 1.93 LBS. PER LINEAL FOOT.

2. CHAIN LINK FABRIC WIRE SHALL BE 11–GAGE MINIMUM. IF SPECIFIED, THE PLASTIC COATED STEEL MESH AND STAINED REDWOOD SLATS ARE AS FOLLOW:

   A) PLASTIC COATED CHAIN LINK FABRIC SHALL BE 11–GAGE PLASTIC COATED COMMERCIAL QUALITY STEEL WIRE WOVEN INTO A 2" MESH CHAIN LINK FABRIC. PLASTIC COATING SHALL BE FIRMLY BONDED TO THE STEEL CORE WIRE AND PROVIDE A DENSE IMPERVIOUS COVERING AT LEAST 0.005" THICK. THE COATING SHALL BE OF A HIGH QUALITY AND SHOW NO DELETERIOUS EFFECTS FROM CHEMICALS SUCH AS AMMONIUM HYDROXIDE, SODIUM CHLORIDE, GASOLINE, PETROLIUM OILS, OR HYDROCHLORIC ACID, NOR SHALL IT SUPPORT COMBUSTION. THE COATING SHALL ALSO HAVE AN ESTHETICALLY PLEASING COLOR THAT WILL NOT FADE, CRACK, OR SPLIT FROM NORMAL AGE AND EXPOSURE.

   B) REDWOOD PICKET CHAIN LINK FABRIC SHALL HAVE 9–GAGE HEAVILY ZINC COATED CHAIN LINK WIRE WOVEN IN A 3 1/2" X 5 1/2" MESH AND STANDARD GRADE "A" 3/8" X 2 1/2" STAINED REDWOOD PICKETS INSERTED VERTICALLY IN EACH MESH OF THE CHAIN LINK FABRIC FOR THE FULL HEIGHT OF THE FABRIC.

DRAWN BY: M. LEE	CHAIN LINK FENCE	MI-4
CHECKED BY: B. TRAN		
APPROVED BY: G. GOMEZ		
DATE: DECEMBER 2002	CITY OF SANTA CLARA	PAGE: 71