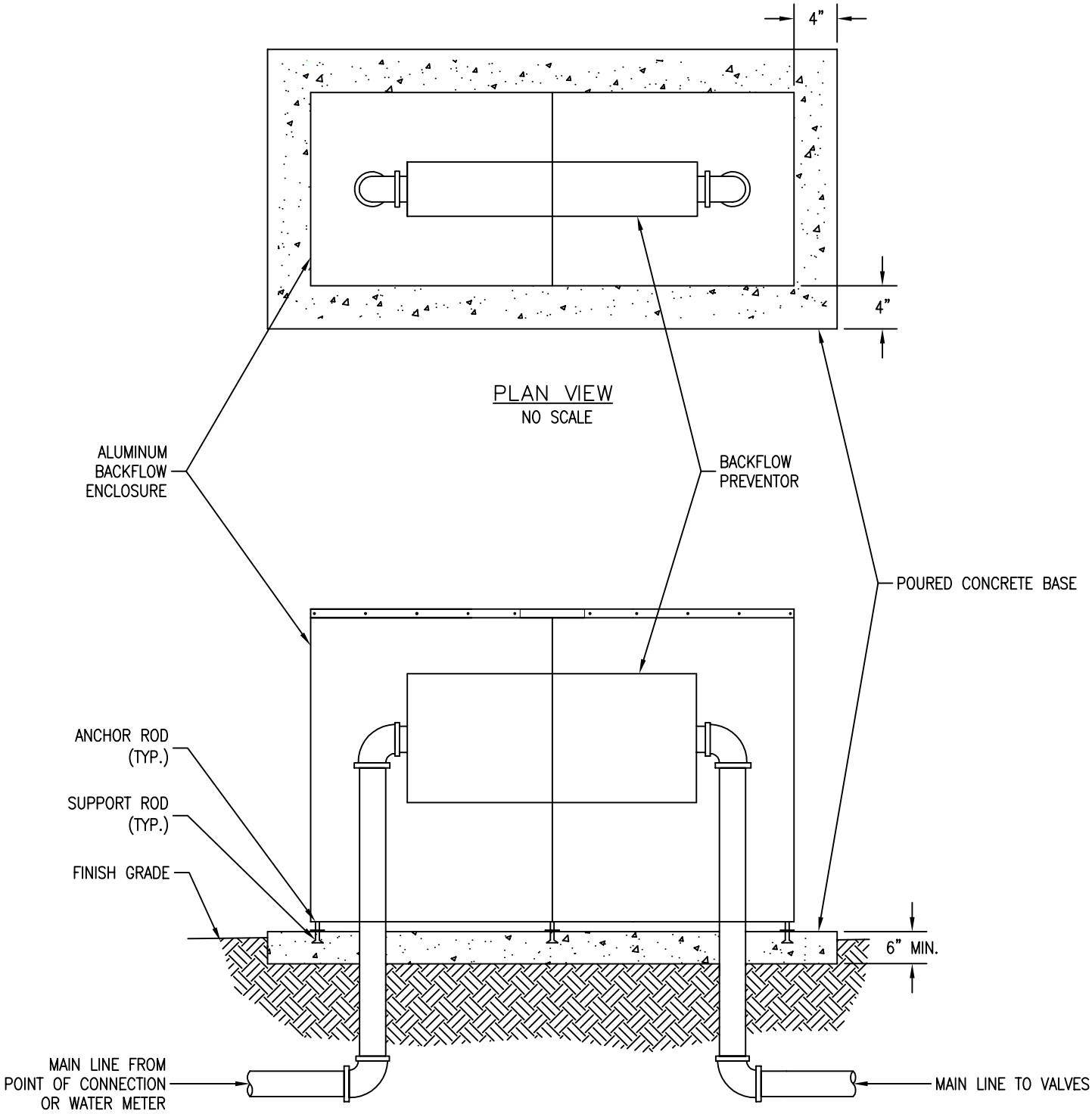

ELEVATION VIEW
NO SCALE

DRAWN BY: M. LEE	BACKFLOW ENCLOSURE	LS-18
CHECKED BY: J. MENDOZA		
APPROVED BY: G. GOMEZ		
DATE: DECEMBER 2002	CITY OF SANTA CLARA	PAGE: 63