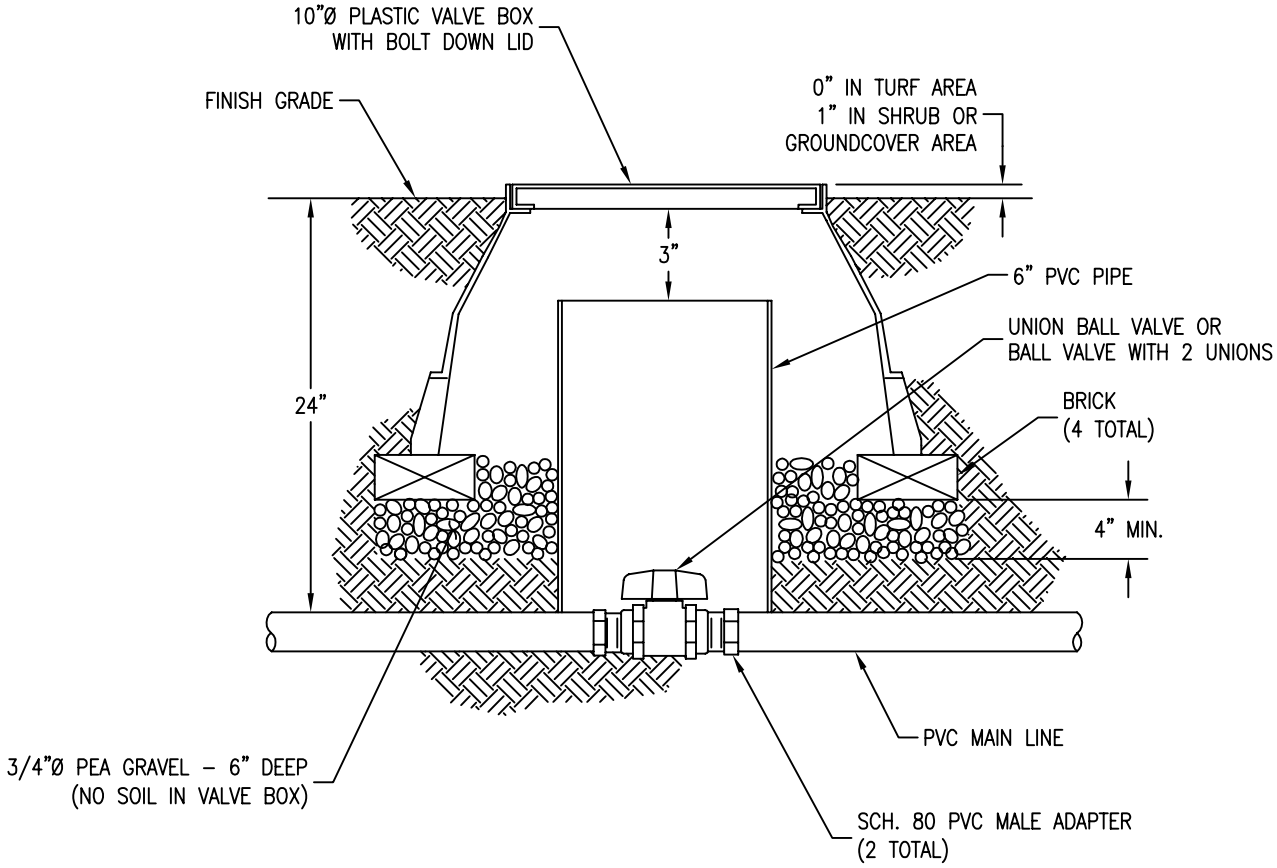

ELEVATION VIEW
NO SCALE

DRAWN BY: M. LEE	UNION BALL VALVE	LS-13
CHECKED BY: J. MENDOZA		
APPROVED BY: G. GOMEZ		
DATE: DECEMBER 2002	CITY OF SANTA CLARA	PAGE: 58

"Standard Details" • City of Santa Clara Department of Public Works • 1500 Warburton Ave, Santa Clara, CA 95050 • Main: 408-615-3000 • Fax: 408-985-7936 • engineering@santaclaraca.gov