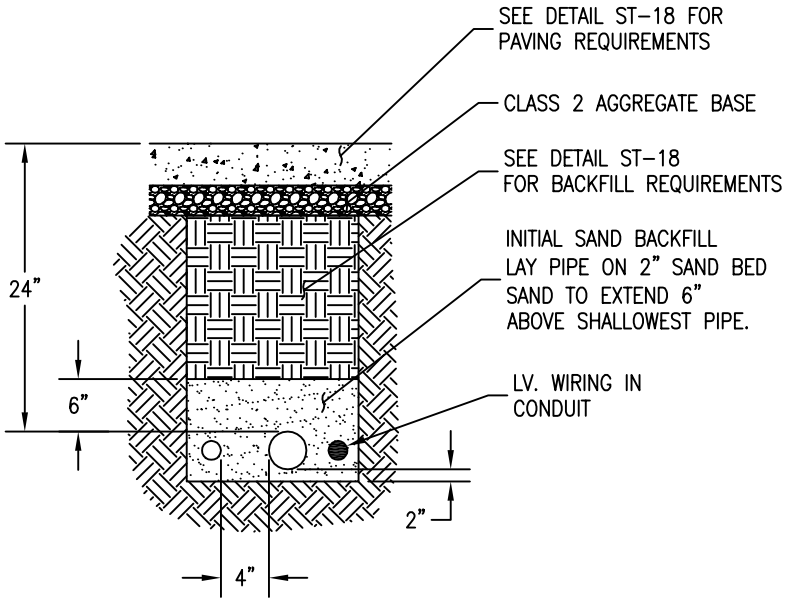

TRENCH IN PAVED AREA
ELEVATION VIEW
NO SCALE

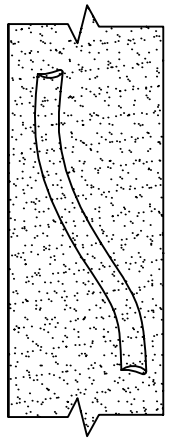

SNAKE ALL PIPE
IN TRENCHES
AS SHOWN

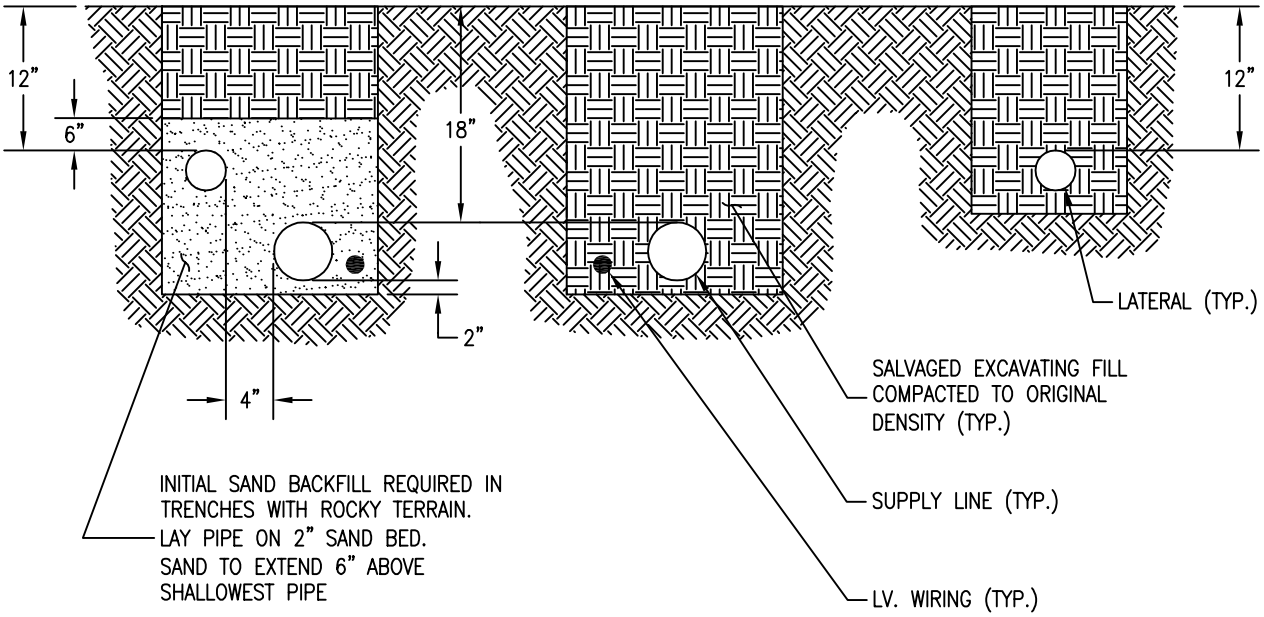

TRENCHS IN PLANTING AREA
ELEVATION VIEW
NO SCALE

DRAWN BY: M. LEE	LANDSCAPE TRENCHING DETAILS	LS-7
CHECKED BY: J. MENDOZA		
APPROVED BY: G. GOMEZ		
DATE: DECEMBER 2002	CITY OF SANTA CLARA	PAGE: 52