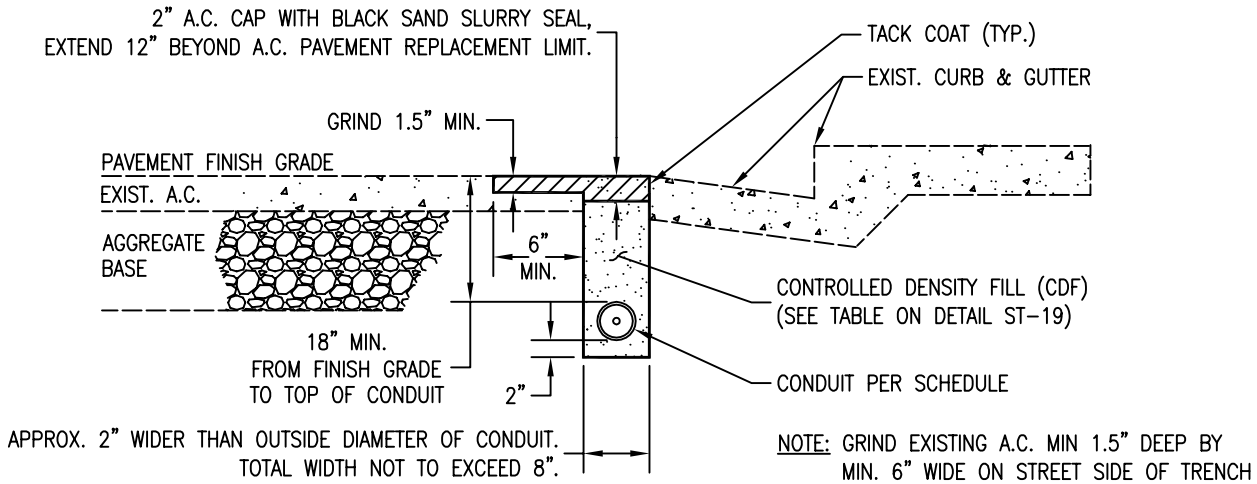

NOTE: GRIND EXISTING A.C. MIN 1.5" DEEP BY MIN. 6" WIDE ON STREET SIDE OF TRENCH AFTER CONDUIT IS INSTALLED.

TRENCH AT LIP OF GUTTER

NO SCALE

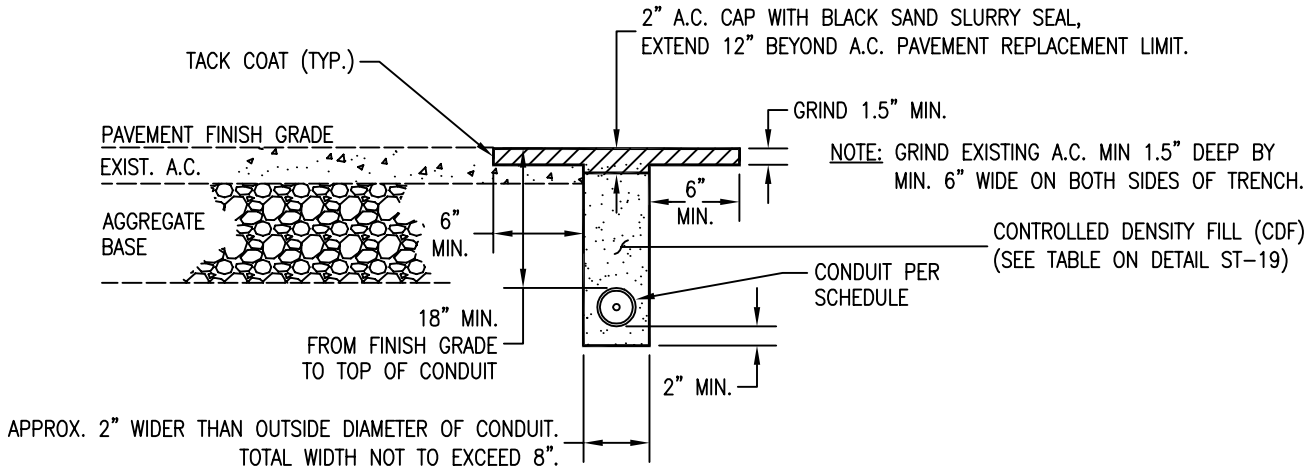

NOTE: GRIND EXISTING A.C. MIN 1.5" DEEP BY MIN. 6" WIDE ON BOTH SIDES OF TRENCH.

TRENCH IN ROADWAY

NO SCALE

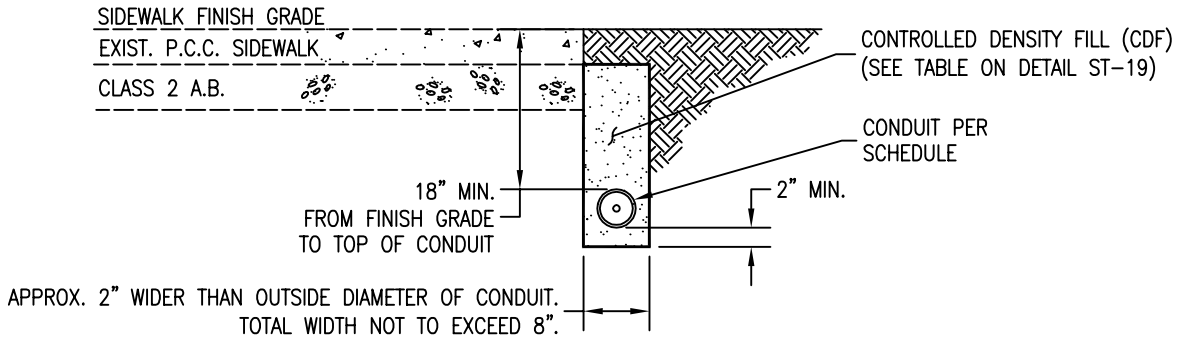

TRENCH AT BACK OF SIDEWALK

NO SCALE

DRAWN BY: M. LEE	TRAFFIC SIGNAL TRENCH DETAILS	TR-5
CHECKED BY: D. PITTON		
APPROVED BY: T. SUPAN		
DATE: AUGUST 2006	CITY OF SANTA CLARA	PAGE: 42

"Standard Details" • City of Santa Clara Department of Public Works • 1500 Warburton Ave, Santa Clara, CA 95050 • Main: 408-615-3000 • Fax: 408-985-7936 • engineering@santaclaraca.gov