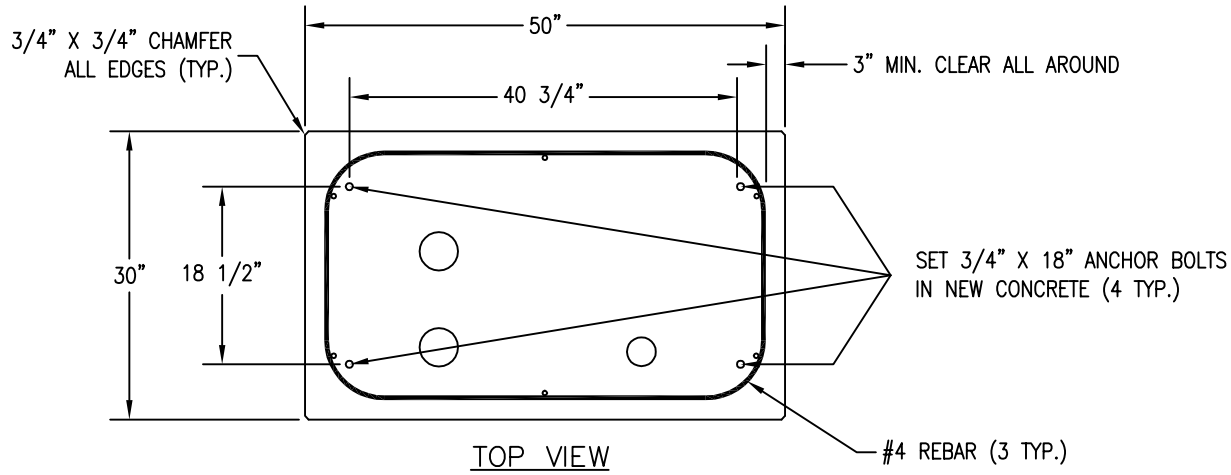

TOP VIEW
NO SCALE

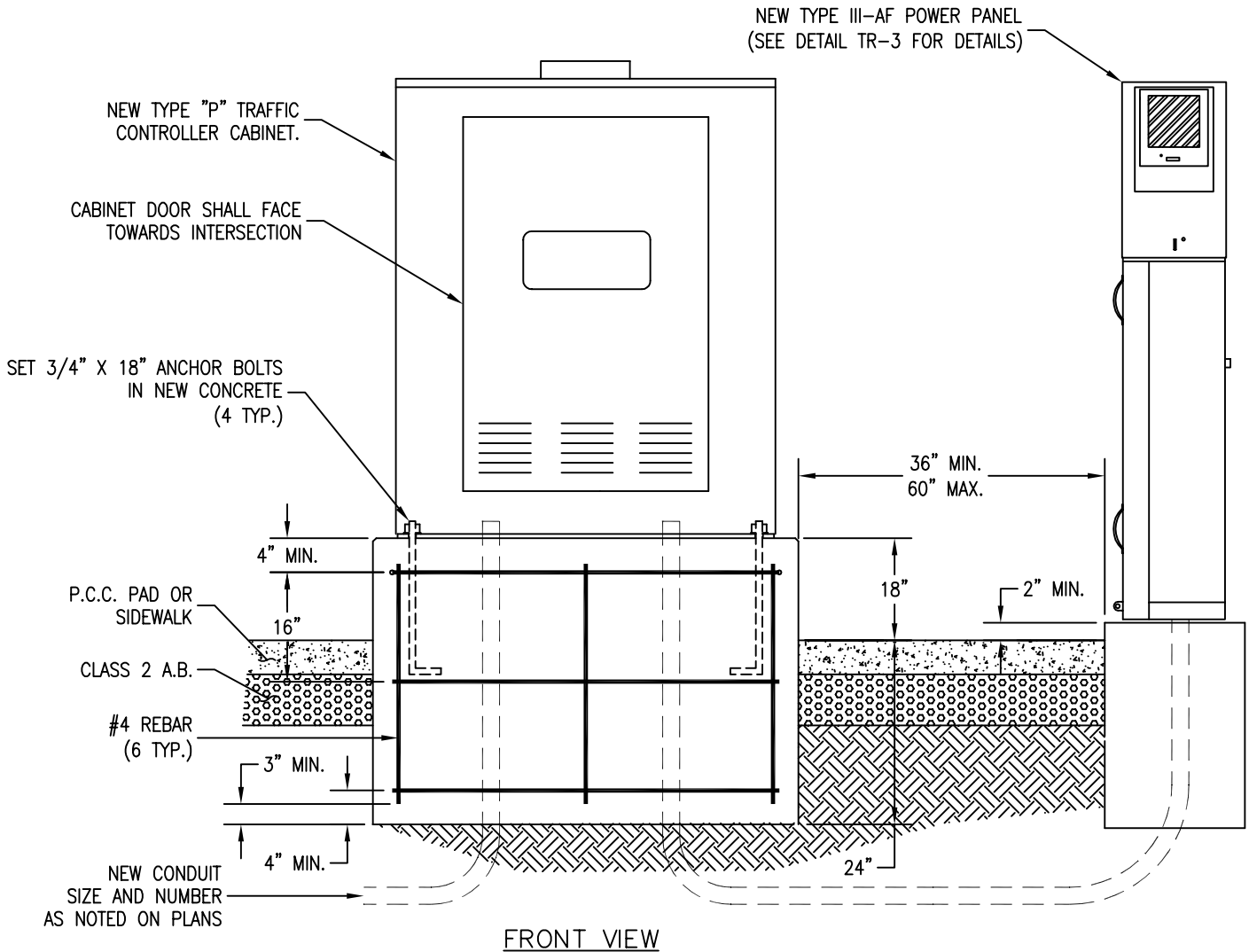

FRONT VIEW
NO SCALE

NOTE: GROUND ROD TO BE IN PULL BOX NEXT TO CABINET.

REVISED 10/20/03

DRAWN BY: M. LEE	TRAFFIC SIGNAL CONTROLLER CABINET	TR-2
CHECKED BY: D. PITTON		
APPROVED BY: T. SUPAN		
DATE: NOVEMBER 2005	CITY OF SANTA CLARA	PAGE: 39

"Standard Details" • City of Santa Clara Department of Public Works • 1500 Warburton Ave, Santa Clara, CA 95050 • Main: 408-615-3000 • Fax: 408-985-7936 • engineering@santaclaraca.gov