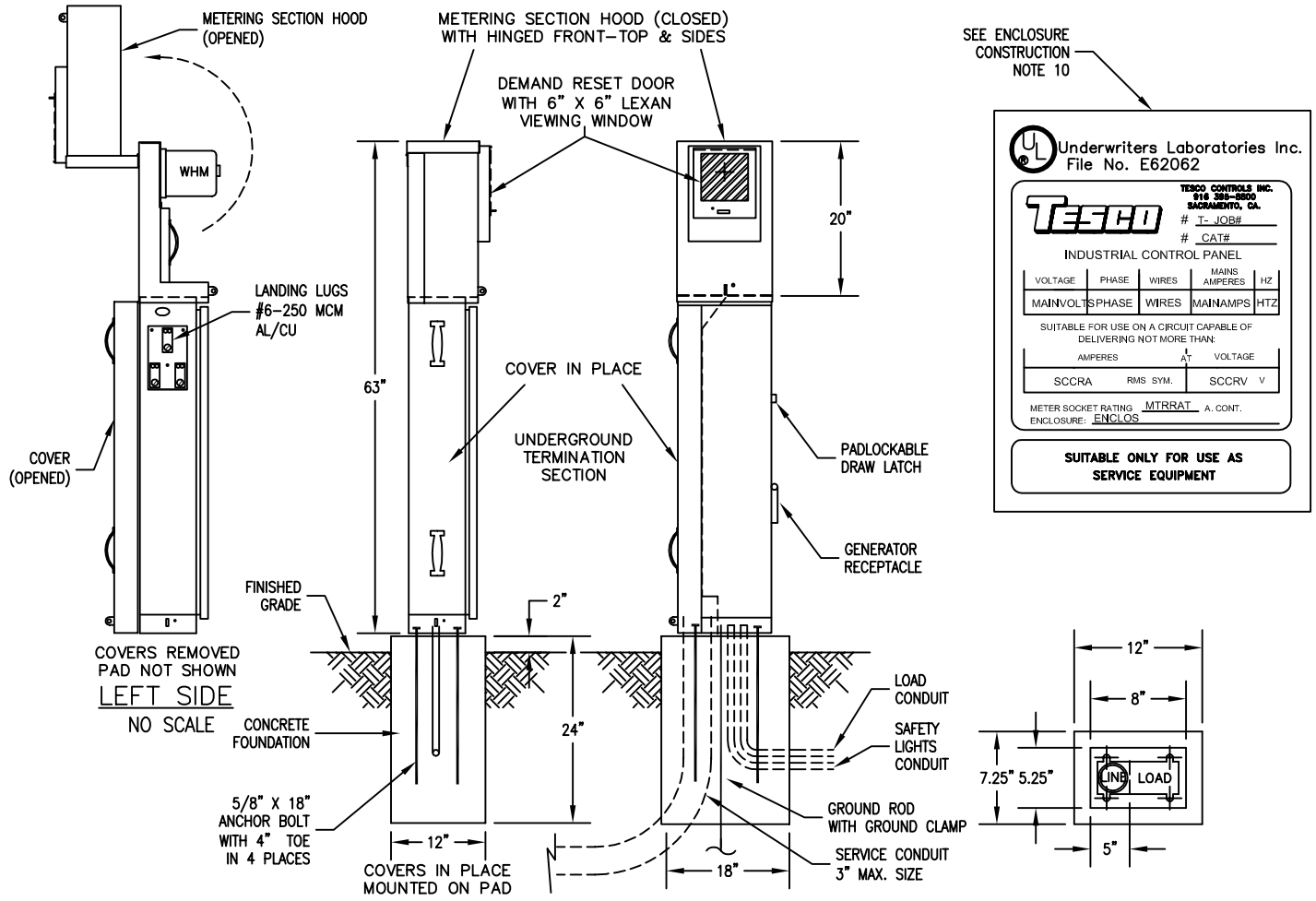

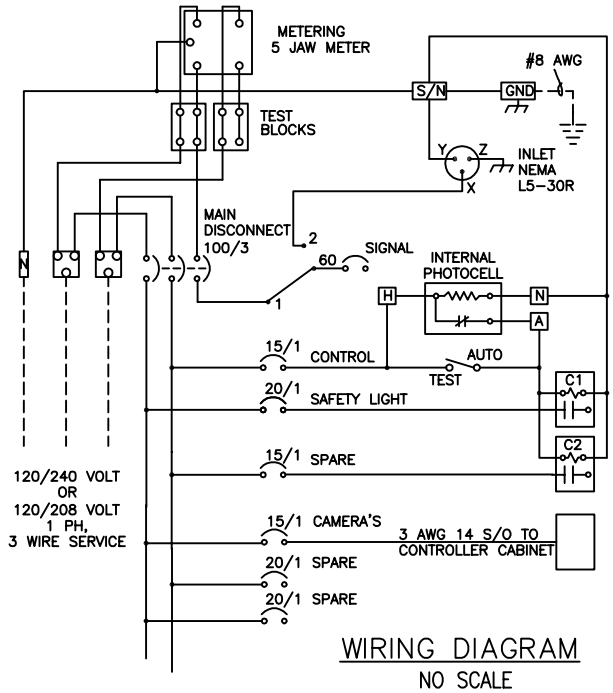

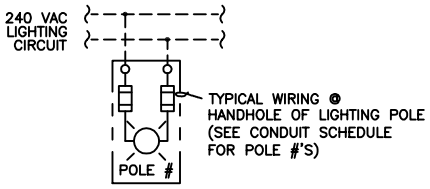

ENCLOSURE CONSTRUCTION NOTES:

1. FABRICATED FROM 1/8" ALUMINUM SHEET STOCK ELECTRICALLY WELDED AND REINFORCED WHERE REQUIRED.
2. CONSTRUCTION WILL BE NEMA 3R AND 12, RAINTIGHT AND DUST TIGHT.
3. ALL NUTS, BOLTS, SCREWS AND HINGES SHALL BE STAINLESS STEEL.
4. NUTS, BOLTS & SCREWS SHALL NOT BE VISIBLE FROM OUTSIDE OF ENCLOSURE.
5. PHENOLIC NAMEPLATES SHALL BE PROVIDED AS REQUIRED.
6. CONTROL WIRING SHALL BE MARKED AT BOTH ENDS BY PERMANENT WIRE MARKERS.
7. A PLASTIC COVERED WIRING DIAGRAM SHALL BE ATTACHED TO THE INSIDE OF THE FRONT DOOR.
8. ENCLOSURE WILL BE FACTORY WIRED AND CONFORM TO REQUIRED NEMA STANDARD.
9. FINISH: ANODIZED ALUMINUM
10. PANEL SHALL BE TESCO TYPE III AF OR APPROVED EQUAL.

THE CITY OF SANTA CLARA CALIFORNIA The Mission City 1852	DRAWN BY: M. LEE	TRAFFIC SIGNAL POWER PANEL	TR-3
	CHECKED BY: D. PITTON		
	APPROVED BY: T. SUPAN		
	DATE: AUGUST 2006	CITY OF SANTA CLARA	PAGE: 40

"Standard Details" • City of Santa Clara Department of Public Works • 1500 Warburton Ave, Santa Clara, CA 95050 • Main: 408-615-3000 • Fax: 408-985-7936 • engineering@santaclaraca.gov