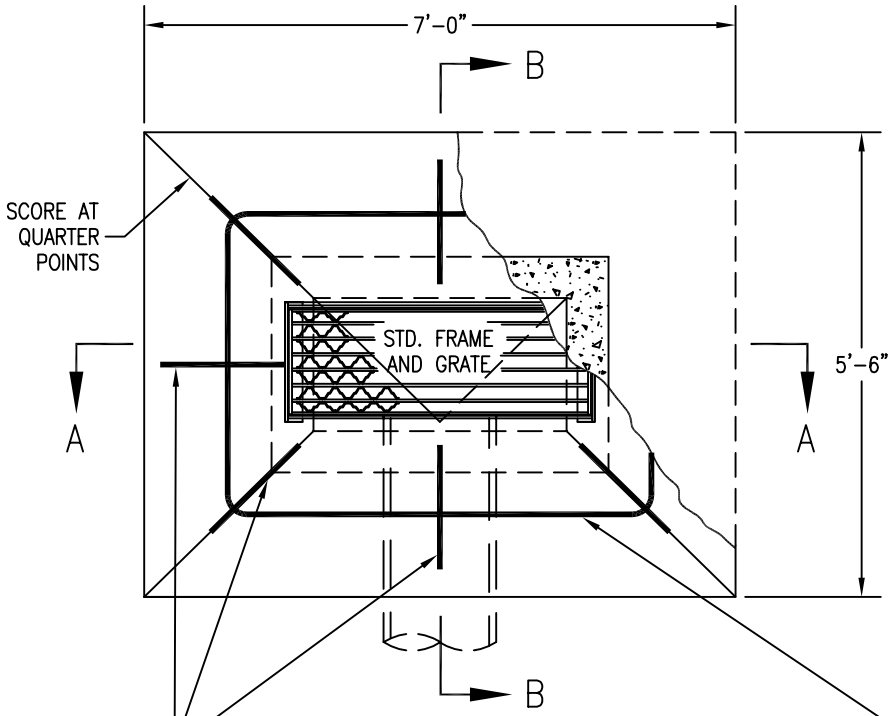

PLAN VIEW
NO SCALE

NOTES:

1. WHERE VALLEY GUTTER MEETS INLET APRON, SHAPE APRON TO CONFORM TO VALLEY GUTTER.
2. PRECAST INLETS MAY BE USED SUBJECT TO WRITTEN APPROVAL OF THE CITY ENGINEER.

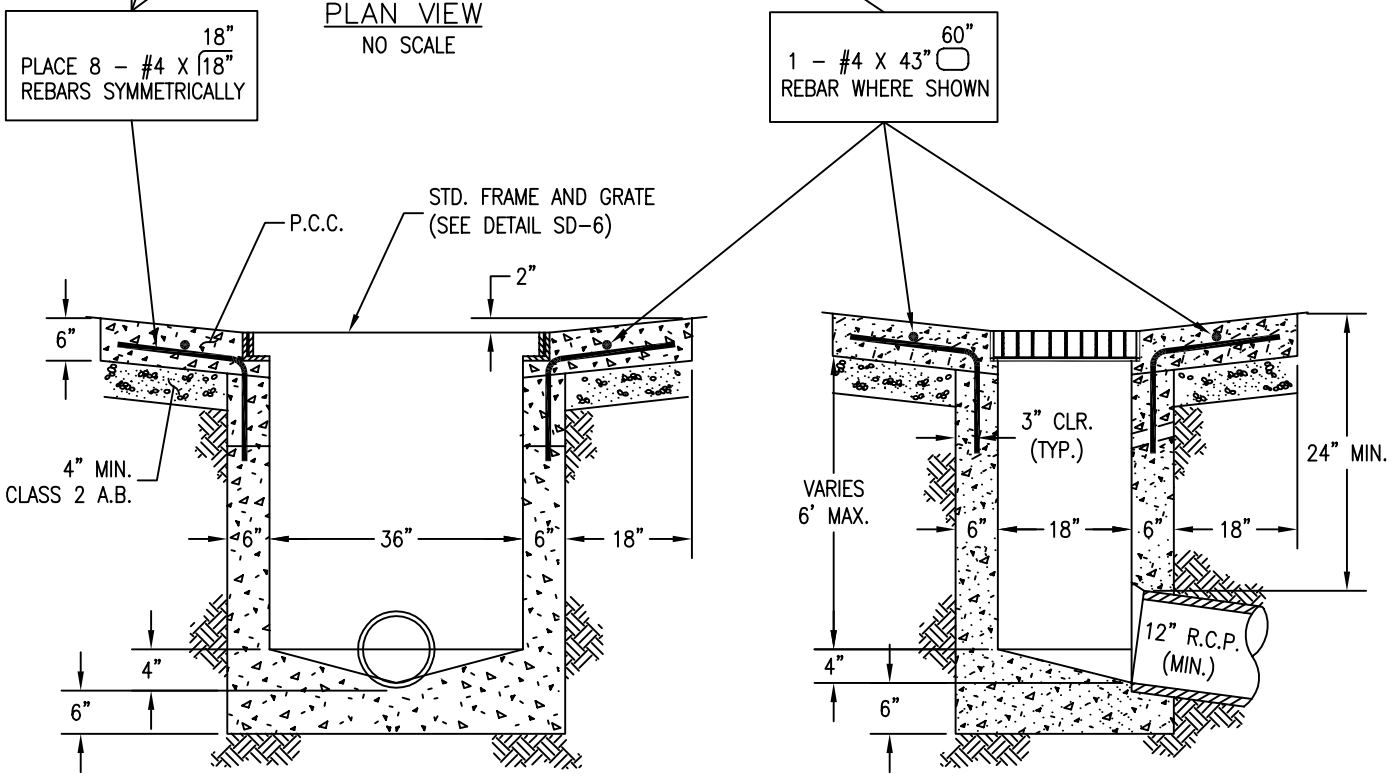

SECTION A-A
NO SCALE

SECTION B-B
NO SCALE

DRAWN BY: M. LEE	DROP INLET CATCH BASIN	SD-4
CHECKED BY: B. TRAN		
APPROVED BY: G. GOMEZ		
DATE: OCTOBER 2002	CITY OF SANTA CLARA	PAGE: 24

"Standard Details" • City of Santa Clara Department of Public Works • 1500 Warburton Ave, Santa Clara, CA 95050 • Main: 408-615-3000 • Fax: 408-985-7936 • engineering@santaclaraca.gov