Santa Clara Fire Department

Fire Service
Underground Piping

PURPOSE

The purpose of this guideline is to provide the basic information necessary to meet minimum requirements for the design and installation of private hydrant and/or sprinkler supply underground piping in accordance with the provisions of the 2013 California Fire Code (CFC), the 2013 California Building Code (CBC), and the 2013 editions of NFPA 24, NFPA 13, NFPA 13R, and locally adopted amendments to these codes.

SCOPE

This guideline is applicable to all private underground piping for hydrants and/or sprinkler supply lines within the jurisdiction of the Santa Clara Fire Department (SCFD). This guideline is not applicable to underground piping serving fire sprinkler systems designed in accordance with 2013 NFPA 13D and some systems designed in accordance with 2013 NFPA 13R.

SUBMITTAL REQUIREMENTS

1. General:

   A. Plans for all private underground piping for private hydrants and/or sprinkler supply line(s) including appurtenances (Fire Department Connections (FDCs), Post Indicator Valves (PIVs) and Back Flow Preventers) shall be submitted to SCFD for review and approval prior to installation.

   B. Provide a minimum of three copies of the plans.

   C. Plans shall be legible, scaled to nationally recognized standards, and printed as a blue or black line drawing. The SCFD does not accept either pen and ink plans or pen & ink changes to blue line plans.

   D. Submit a completed SCFD Permit Application, which can be obtained at the Fire Marshal's Office which is located at 1675 Lincoln Street, Santa Clara, or on the City of Santa Clara website at www.santaclaraca.gov.

   E. Submit appropriate fees: Please reference SCFD Plan Check Fees document.

   F. Current water flow data from the City of Santa Clara Water Department.

   G. Contractor must have a valid City of Santa Clara Business License in order to conduct business in Santa Clara.

   H. Information to be provided on the title page:

      i. Applicable codes and standards used for the system design (e.g., 2013 CFC, 2013 CBC, 2013 NFPA 24, etc.).

      ii. Project location, including the full legal address of the facility, and building number(s) if applicable; tract or parcel number.

      iii. The contractor's name, telephone number, address, and California State contractor's license number and classification. Contractors must possess a Class A, C-16, or C-16 with Civil Engineer's Stamp. Class A and C-16 contractors can design underground fire service projects as long as they perform the entire installation without subcontracting

Fire Prevention and Hazardous Materials Division ▪ 1675 Lincoln St ▪ Santa Clara, CA 95050
Fire Prevention Tel: (408) 615-4970 ▪ Hazardous Materials Tel: (408) 615-4960 ▪ Fax: (408) 241-3006

any of the work out. Underground fire service piping must be designed by a Civil Engineer when installed by a contractor who did not design the system (Fire Protection Engineers cannot design fire service piping). A Civil Engineer can review plans designed by others and take responsible charge of the plans by signing and wet stamping them.

I. Required Information to be Included on Plans:
   i. All driveways and fire department access roads shall be shown on plans.
   ii. Location of public mains and all public hydrants within 300 feet of the site.
   iii. Location of all valves. Specify the type for each (e.g., post indicator valve (PIV), key gate valve, system control valve, double detector check (DDC), outside stem and yoke (OS&Y), etc.).
   iv. Pipe size, class, and type; specify lined or unlined if applicable.
   v. Thrust block locations, or specify the means of restraint as approved by 2013 NFPA 24.

2. Design Requirements:

A. A PIV is required to be installed down stream and adjacent to the City's back flow preventer.
B. PIV's or other approved indicating valves, shall be located a minimum of 40 feet from the building served. Where it is *impractical* to locate control valve(s) 40 feet from the building served, they may be located closer by one of the following methods:
   i. Approved wall mount indicating valves: Located on exterior walls without openings within 15 feet of the valve/s.
   ii. Approved wall mount indicating valves: Located on exterior walls without openings within 15 feet of the valves.
   iii. Valve room: When the valve is placed in a room separated from the building by a one-hour fire barrier and the room is accessible from outside.
   iv. Exterior risers: The valve may be placed in locations adjacent to exterior walls without openings within 15 feet of the valve.
   v. An approved manner acceptable by SCFD.

C. Fire department connections shall be located on the main/public street side of the building, wherever possible, and shall be within 100-feet of a public hydrant (CFC 912.2).

D. Fire department connections shall be located on the main street (front lobby) side of each building of a complex, when surrounded by private streets, as well as, having one main FDC that feeds the entire site at the main/public street for the complex (CFC 912.2).

E. Each fire department connection shall be located within 100-feet of hydrant. Fire department connections shall be so located that fire apparatus and hose connected to the hydrant will not obstruct access to the building for other fire apparatus. To clarify, this means the hydrant and FDC shall be on the same side of the street and that the standard minimum road width shall be increase to at least 24-feet in width for the area of the FDC and its affiliated hydrant to allow other fire apparatus to pass after hooked up (CFC 912.2)

F. The FDC shall be in a position allowing hose lines to be readily and conveniently attached. The FDC shall contain a minimum of *two* 2½" inlets. When the sprinkler demand is 500 gpm or greater (including the interior hose stream demand) or a standpipe system is included, *four* 2½" inlets shall be provided. The FDC shall be a listed assembly, i.e. Potter Roemer FDC Models 5761-5764, 5775, 5776, 5780, 5781, 5785, 5786, Guardian FDC Models 6224, 6226, 6242, 6244, or similar listed devices. Note: These are just examples of the models that would be accepted by SCFD. SCFD does not endorse any specific manufacturer.

G. The FDC may be located within 150 feet of a private hydrant if the FDC is connected to the fire sprinkler system by a dedicated pipe that connects on the system side (i.e., downstream) of the sprinkler system check valve. Fire department connections shall be painted OSHA safety red. All FDCs shall have durable signs clearly indicating the address of the facility they serve.

H. Where a portion of the facility or building is more than 400 feet from a hydrant on a fire apparatus access road, as measured by an approved route around the exterior of the facility or building, fire

hydrants shall be required in number and distribution in accordance with CFC Appendix C without taking any fire-flow reductions noted within CFC Appendix B (CFC 507.5).

I. Large private fire service mains shall have post indicating type sectional control valves at appropriate points in order to permit isolation of the system in the event of a break or during repair or extension. Note: A large system is considered one with more than six connections including fire hydrants.
   i. Sectional valves shall be an indicating type valve.
   ii. Sectional control valves shall be located so that no more than 5 appurtenances are affected by the shut down of any single porting of the fire service main.

J. The attached "SANTA CLARA FIRE DEPARTMENT NOTES: FIRE SERVICE UNDERGROUND" shall be placed, verbatim, on all underground plans. The attached "NOTES FOR THRUST BLOCK RESTRAINTS" shall be placed, verbatim, on all underground plans that use thrust blocks as the restraining method.

K. Provide a fire riser detail. When a pipe runs under footings or foundations of the building, a single corrosion resistant stainless steel pipe unit assembly is required. The pipe shall terminate a maximum of 18 inches from the exterior wall and six inches above the finished floor. A minimum of 2 inches clearance (annular space) shall be provided where the pipe passes through the floor or wall.

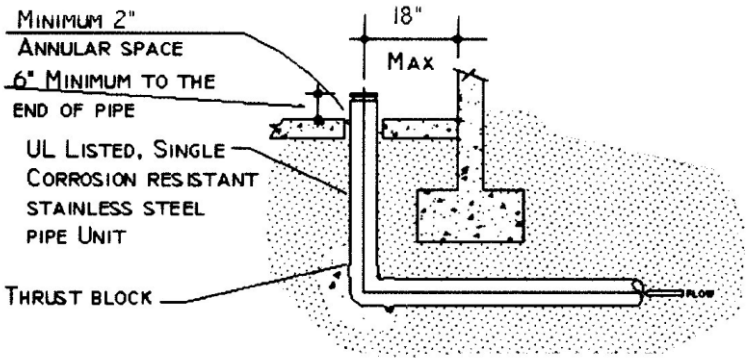

UNDER FOUNDATION
RISER DETAIL (N.T.S.)

3. Underground Service for NFPA 13R Systems:

   A. Underground service shall comply with one of the following designs based upon the parameters described:
      i. Underground system/s serving more than one R1 or R2 occupancy shall comply with NFPA 13 and NFPA 24.
      ii. A single underground service not tied into the domestic water with the FDC installed upstream of the building sprinkler riser check valve shall comply with NFPA 13 and NFPA 24.
      iii. The system shall comply with NFPA 13R and the California Plumbing Code (CPC) when:
         1. A single underground service is not on the same manifold supply line shared with the domestic water.
         2. The FDC is located downstream of sprinkler system riser check valve.
      iv. The system shall comply with NFPA 13R and the California Plumbing Code (CPC) when:
         1. A single underground service is on the same manifold supply line shared with the domestic water.
         2. The FDC is located downstream of the sprinkler system riser check valve.

BACK FLOW PREVENTION DEVICES

1. **Installation of Back Flow Preventers for Existing Fire Services.** When a new back flow preventer is installed for an existing fire service a permit shall be required. An inspection will include the hydrostatic testing and flushing of the fire service line. The permit submittal shall include the following:

A. Manufacture's specifications and pressure loss chart for the back flow preventer being installed. If the water meter is installed on the same line, then submit the meter's specification and pressure loss chart as well.

B. Hydraulic calculations demonstrating that the sprinkler demand and hose allowance still provide a 10% safety margin from what is available for the existing system.

2. **New Fire Service installations.** Hydraulic calculations will be required for new fire services serving either sprinkler systems, or hydrant systems and shall include the pressure losses for both the water meter (if applicable) and the back flow prevention device. The permit submittal shall include:

A. Manufacture's specifications and pressure loss charts for the back flow preventer and water meter where applicable.

SCHEDULING INSPECTIONS

1. Inspection appointments can only be made by the permit applicant or listed contractor.
2. It is the responsibility of the permit applicant or listed contractor to have a representative on the job site during the inspection with a set of approved plans. Failure to do so will result in the cancellation of the inspection and a re-inspection fee will be assessed.
3. Call (408) 615-4970 at least one business day prior to the desired date of the inspection. Inspections are assigned on a first come first served basis. The inspection request line is open Monday through Friday between 8:00 a.m. and 5:00 p.m.

SMART PERMIT INFORMATION SYSTEM

The City of Santa Clara offers you the opportunity to check the status of you fire permits on-line. To access the Smart Permit Information System please log onto the system at:

http://santaclaraca.gov/community/smt_permit_information.html

You can search the system using your Case Number (Permit number; fir2008-00001), Project Name, Applicant Name or the address of the project.

PLACE THE FOLLOWING NOTES, VERBATIM, ON THE PLAN:

SANTA CLARA FIRE DEPARTMENT: NOTES FOR FIRE SERVICE UNDERGROUND PIPING

All of the notes listed below shall be placed, verbatim, on the plan under the heading "SANTA CLARA FIRE DEPARTMENT NOTES: FIRE SERVICE UNDERGROUND PIPING."

INSPECTION REQUIREMENTS

1. A minimum of two SCFD inspections are required for underground piping serving sprinkler systems and/or private hydrants: 1) Hydrostatic testing; 2) Flush inspection. Please call (408) 615-4970 during normal business hours to schedule inspection.

2. **Hydro Testing:** Thrust blocks shall be in place. All piping shall be in place and exposed for visual inspection. Pipe shall be laid on a minimum twelve-inch bed of clean sand. Trench shall be of a sufficient depth to allow the required cover above pipe. Ferrous pipe and fittings shall be encased in polyethylene tubing (not wrapped) and tightly taped to inhibit water infiltration. Bolts and ferrous joints shall be coated with asphaltic sealant or other corrosion retarding material. Pipe shall be center loaded with clean sand to prevent uplift, but all joints shall remain exposed. The system shall be hydrostatically tested at 200 psi (or 50 psi over maximum static pressure, whichever is greater) for a duration of at least two hours prior to the arrival of the SCFD inspector. See items 10 – 16 and 20 below for detailed requirements.

3. **Flush Inspection:** All portions of the underground system shall be flushed to remove debris prior to connection to overhead piping. Flow shall be through a minimum of a four-inch hose or pipe, unless otherwise approved by the SCFD inspector prior to scheduling the flush. Hose or pipe shall be restrained to prevent injury and damage. Discharged water shall be collected or diverted in accordance with applicable SWPPP/NPDES provisions. The SCFD flush and hydro inspections may be scheduled concurrently. See items 11, 12, and 17 – 20 below for detailed requirements.

4. Upon flush inspection or prior to final sprinkler or site inspection, all detector check assemblies, control valves, and fire department connections (FDC) shall be clearly labeled with the address(es) served by the device. Address signs shall be securely attached to the device and be of a durable, fade resistant material which is visible and legible from the fire lane. FDC and four-inch hydrant outlets shall be unobstructed and oriented toward the fire lane. Valves shall be locked in the open position with breakaway locks. All valves and private hydrants shall be painted OSHA safety red. Hydrant and FDC caps shall be in place. See items 5 – 8 and 17 – 20 for detailed requirements.

GENERAL REQUIREMENTS

5. Installation, inspection, and testing shall conform to 2013 editions of NFPA 13 and NFPA 24. SCFD jurisdiction begins at the downstream side of the last valve on the detector check assembly. Verify design and installation requirements for the portion of the system preceding this point with the City of Santa Clara Water Department.

6. Vegetation shall be selected and maintained in such a manner as to allow immediate location of, and unobstructed access to; all hydrants, control valves, fire department connections, and other devices or areas used for firefighting purposes.

7. A minimum three-foot (36 inch) clearance shall be provided around all hydrants and post indicating valves. A minimum three-foot (36 inch) clearance shall be provided on at least one side of a detector check assembly to allow proper operation of the device. The front of FDC and the adjacent fire access roadway shall be free of any obstructions.

8. Any future modification to the approved private underground piping system is subject to review, inspection, and approval by the Santa Clara Fire Department.

9. Approval of this plan shall not be interpreted as approval of any information or project conditions other than those items and requirements identified in SCFD Guideline FP-03, and applicable sections of the

2013 editions of NFPA 13 and NFPA 24. This project may be subject to additional requirements not stated herein upon examination of actual site and project conditions or disclosure of additional information.

PIPE AND TRENCH REQUIREMENTS

10. A six-inch bed of clean fill sand shall be provided both below and 12-inch above the pipe (total of 8 inches plus outer diameter of the pipe).
11. All piping shall be approved for use in fire service systems. Class 150 will be used at a minimum, and class 200 pipe shall be used where the water pressure exceeds 150 psi. The use of galvanized pipe is prohibited when a portion of the system is buried.
12. All ferrous pipe and fittings shall be protected with a loose 8mil polyethylene tube. Wrapping the pipe in polyethylene sheeting is not acceptable. The ends of the tube and any splices made for tees or other piping components shall be tightly sealed with two-inch tape that is approved for underground use.
13. All bolts used for underground connections, including T bolts, shall be stainless steel. All bolts and ferrous fittings shall be cleaned and thoroughly coated with asphalt or other corrosion retarding material after assembly and prior to the installation of poly-tube.
14. Thrust blocks, or another approved method of thrust restraint, shall be provided wherever pipe changes direction.
15. A minimum two-inch clearance shall be provided where the pipe passes through slabs or walls. Underground system shall terminate at the riser flange and placed a maximum of 18 inches from an exterior wall and 6 inches above the slab.
16. Pipe running under a building or building foundation shall be stainless steel and shall not contain mechanical joints.
17. The FDC shall contain a minimum of two 2 ½ " inlets. When the system design demand, including the interior hose stream demand or a standpipe, is a minimum 500 gpm, four 2 ½" inlets shall be provided. FDCs shall be painted OSHA safety red.

HYDRANT REQUIREMENTS

18. All fire hydrants shall be wet barrel equivalent to the CLOW #860 type with a 4-inch steamer outlet and two 2-1/2 inch hose outlets. The 4-inch outlet shall be directly facing the street. NOTE: 4-1/2 to 4-inch adapters will not be allowed.
19. The 4" outlet shall face the fire department access road. All outlets shall be provided with National Standard threads (NST). Private hydrants shall be painted OSHA safety yellow.
20. Fire hydrant supply piping shall be a minimum of six inches in diameter. The lowest valve-operating nut shall be a minimum of eighteen inches above grade and the hydrant flange shall be a minimum of two inches above grade.
21. A keyed gate valve shall be provided for each hydrant in an accessible location. Keyed gate valves shall be located within six to ten feet of the hydrant in an area that is unobstructed and clearly visible. Valves shall not be located in parking stalls.
22. All fire hydrants shall have a "Blue Reflective Pavement Marker" indicating their location. Private hydrants and markers are to be maintained in good condition by the property owner.

SANTA CLARA FIRE DEPARTMENT:
NOTES FOR THRUST BLOCK RESTRAINTS

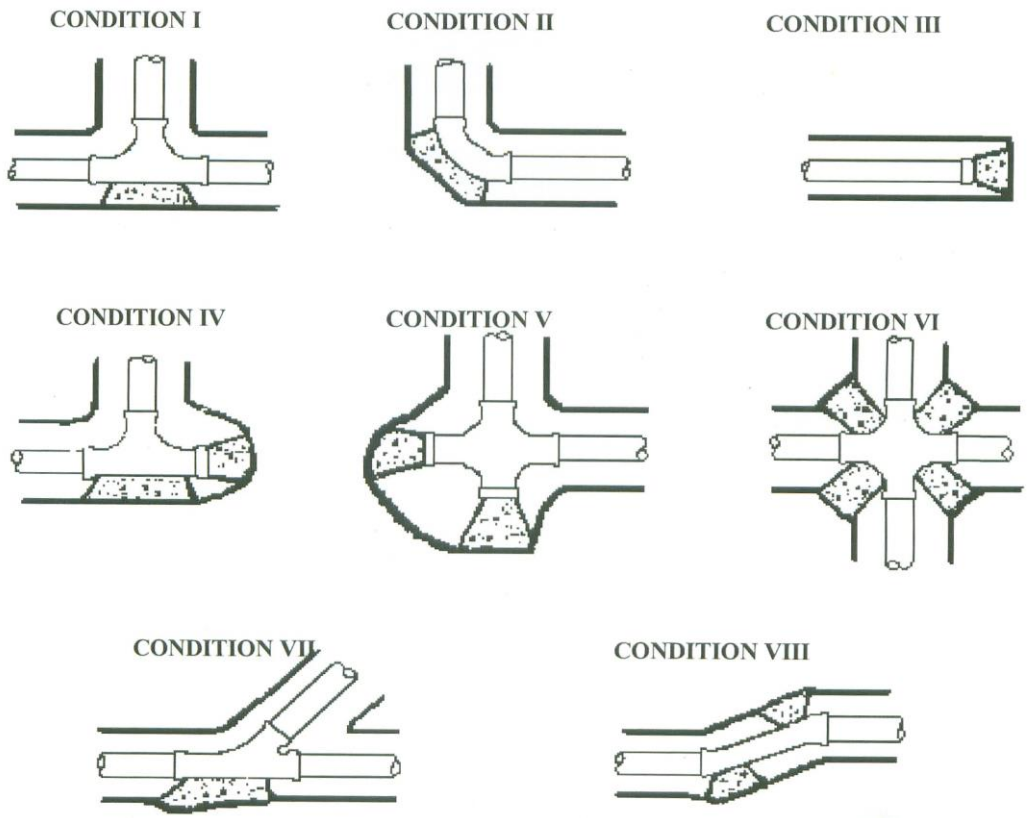

THRUST BLOCK BEARING AREA IN SQUARE FEET								
Pipe Size	**CONDITION**							
	I	**II**	**III**	**IV**	**V**	**VI**	**VII**	**VIII**
<6”	2.0	2.9	2.0	2@2.0	2@2.0	4@1.6	2.0	2@1.6
6”	4.3	4.0	4.3	2@4.3	2@4.3	4@3.3	4.3	2@3.3
8”	7.4	10.6	7.4	2@7.4	2@7.4	4@5.7	7.4	2@5.7
10”	12.1	17.1	12.1	2@12.1	2@12.1	4@9.3	12.1	2@9.3
12”	17.2	24.1	17.2	2@17.2	2@17.2	4@13.2	17.2	2@13.2

NOTES

1. Thrust block areas based on 225 PSI and 2, 000 PSF soil pressure with 2 ½ feet of cover minimum.
2. Thrust block bearing faces shall be placed against undisturbed soil, approved compacted backfill, or Class 100E100 slurry.
3. Thrust blocks shall be Class 560C3250 concrete, unless specified otherwise.
4. To facilitate future removal of thrust blocks and line extension use cardboard separators between blocks, if needed.