STANDARD DETAILS

CITY OF SANTA CLARA
2015

PREPARED BY
DEPARTMENT OF PUBLIC WORKS

RAJEEV BATRA
DIRECTOR OF PUBLIC WORKS/
CITY ENGINEER

Department of Public Works
City of Santa Clara, CA

Santa Clara
All-America City
2001

STANDARD DETAILS

APPROVED BY:

Rajeev Batra

RAJEEV BATRA
DIRECTOR OF PUBLIC WORKS/
CITY ENGINEER

DATE: Oct. 27, 2013

Acknowledgement of contributions

Our sincere thanks to the staffs of the
Public Works Department,
Electric Utility Department,
and Water & Sewer Department,
for their contributions.

Copies of this book may be purchased from City's Department of Public Works.
Publication Website: http://santaclaraca.gov/gcsearch.aspx?q=Standard%2520Details

CITY OF SANTA CLARA
DEPARTMENT OF PUBLIC WORKS

STANDARD DETAILS

TABLE OF CONTENTS

Title	Detail	Page
STREETS:		
Driveway Standards	ST-1	1
Driveway Locations	ST-2	2
Driveway Locations at Curb Returns	ST-3	3
Residential Driveway with Attached Sidewalk	ST-4	4
Residential Driveway with Separated Sidewalk	ST-5	5
Depressed Driveway for Existing 5'Attached Sidewalk	ST-6	6
Depressed Commercial Driveway for Existing 5'Attached Sidewalk	ST-7	7
Commercial Driveway with/without Separated Sidewalk	ST-8	8
Commercial Driveway with Attached Sidewalk	ST-9	9
Curb-Return Driveway	ST-10	10
Monolithic Curb and Gutter	ST-11	11
Monolithic Curb, Gutter and Sidewalk	ST-12	12
Concrete Median Curbs and Valley Gutter	ST-13	13
Median Cobblestone Installation	ST-13A	13A
Curved Curb Ramp	ST-14	14
Straight Curb Ramp	ST-15	15
Curb Ramp Grooving and Truncated Dome Details	ST-16	16
Concrete Joints	ST-17	17
Dowel Connections	ST-18	18
Sidewalk to Curb Connection	ST-19	19
Monument	ST-20	20
Special Monument Box Adjustment	ST-21	21
Median Island Taper	ST-22	22
Cul-De-Sac	ST-23	23
Trench Backfill and Pavement Replacement	ST-24	24
Soil Boring Backfill and Pavement Replacement	ST-25	25
Asphalt Concrete Pavement Thickness Requirements	ST-26	26
Steel Plate Benching	ST-27	27
Street Barricade	ST-28	28
STORM DRAINS:		
Curb Face Drainage Outlet	SD-1	29
Curb Inlet Catch Basin	SD-2	30
Type "A" Curb Inlet Catch Basin	SD-3	31
Drop Inlet Catch Basin	SD-4	32

TABLE OF CONTENTS (CON'T)

STORM DRAINS (CON'T):

Adaptation for Existing Catch Basin in New Driveway SD-5 33
Catch Basin Hood, Frame and Grate SD-6 34
Concrete Lug SD-7 35
Connection to Public Storm Drain System SD-8 36

SANITARY SEWERS:

4" & 6" Sanitary Sewer Clean-Out SS-1 37
4" & 6" Sanitary Sewer Lateral Connection SS-2 38
4" & 6" Sanitary Sewer Lateral Connection to Existing Main SS-3 39
Standard Drop Manhole SS-4 40
Flushing Inlet SS-5 41
Sanitary Sewer Manhole Topper SS-6 42

DRAINAGE STRUCTURES:

Manhole DS-1 43
Type "A" Manhole DS-2 44
Manhole Frame, Cover and Grate DS-3 45
Lateral Connection to Existing Manhole DS-4 46
Manhole Raising DS-5 47
Concrete Collar DS-6 48

TRAFFIC:

Street Name Sign and Location TR-1 49
Traffic Signal Controller Cabinet TR-2 50
Traffic Signal Power Panel TR-3 51
Type III Pole TR-4 52
Traffic Signal Trench Details TR-5 53
Traffic Signal Pull Box TR-6 54
Traffic Signal Detector Loops Spacing Detail TR-7 55
Typical Stop Intersection TR-8 56

LANDSCAPE:

Palm Tree Planting LS-1 57
Tree Planting LS-2 58
Tree Staking LS-3 59
Tree Well LS-4 60
Shrub Planting LS-5 61
Tree Protection LS-6 62
Landscape Trenching Details LS-7 63
Tree and Shrub Bubbler LS-8 64

TABLE OF CONTENTS (CON'T)

LANDSCAPE (CON'T):

Pop-Up Sprinkler LS-9 65
Quick Coupler LS-10 66
Landscape Filter LS-11 67
Flow Sensor LS-12 68
Union Ball Valve LS-13 69
Pressure Reducing Valve LS-14 70
Remote Control Valve LS-15 71
Low Volume Remote Control Valve LS-16 72
Master Remote Control Valve LS-17 73
Backflow Enclosure LS-18 74
Reduced Pressure Backflow Assembly LS-19 75
Irrigation Valve Box Locations LS-20 76
Irrigation Satellite (Radio Communication) LS-21 77
Low Voltage Irrigation Wire Connection LS-22 78

MISCELLANEOUS:

Chain Link Fence MI-1 79
Chain Link Double Swing Gate MI-2 80
Concrete Saddle Upper Pipe Installation MI-3 81
Concrete Saddle Lower Pipe Installation MI-4 82

APPENDIX:

Appendix A - General Notes ..... AP-A 83

Department of Public Works
City of Santa Clara, CA

STANDARD DETAILS

STREET SECTION

DETAILS ST-1 TO ST-28

1. Definitions:
   a. Driveway - area between lines $\frac{1}{2}$ driveway width plus 2.5 feet each side of driveway centerline (area of thickened section, see driveway details).
   b. Driveway approach - area between back of curb and property line.
   c. Driveway apron - drive area within private property reserved for vehicular ingress and egress.
   d. Curb cut - area of curb and gutter within the driveway limits described in 1.a. (above).
   e. Driveway centerline - a line drawn normal to the street that crosses the depressed area of the curb at its midpoint.
   f. Driveway width - the length of the fully depressed curb.

2. No person, firm, or corporation shall construct or maintain any driveway across any curbing or sidewalk, or connecting with any uncurbed roadway without first securing a City Encroachment Permit. All construction of such driveways shall be done in conformity with City of Santa Clara Standard Details and Standard Specifications, and shall be subject to City inspection.

3. Not more than 50 percent of the street frontage of any parcel of land shall be devoted to driveways, except in cases of narrow frontages (e.g., cul-de-sacs) when approved by the City Engineer.

4. Driveway centerlines on the same property shall be at least their combined half widths plus 29 feet apart.

5. Driveways located adjacent to side property lines or in proximity to utilities obstructions should in general satisfy the Driveway Locations shown in detail ST-2.

6. Driveways located in proximity to street intersections should in general satisfy the Driveway Locations at Curb Returns shown in detail ST-3.

7. Adjustments to utility facilities or other public improvements shall be accomplished without cost to the City.

8. Any abandoned driveway shall be reconstructed to City standard sidewalk, curb and gutter requirements, concurrent with the new driveway construction without any cost to the City.

9. Where difficulties, unnecessary hardships and effects inconsistent with the general purpose of these driveway standards may result from the strict application of certain provisions thereof, variances may be granted by the City Engineer.

CONDITION 1

DRIVEWAY (D/W) CENTERLINES SHALL NOT BE CLOSER TO THE SIDE PROPERTY LINE THAN HALF D/W WIDTH PLUS 2.5' BUT IN NO CASE SHALL D/W CENTERLINES FOR ADJOINING PROPERTIES BE CLOSER THAN 8' PLUS COMBINED HALF D/W WIDTHS OF BOTH DRIVEWAYS.

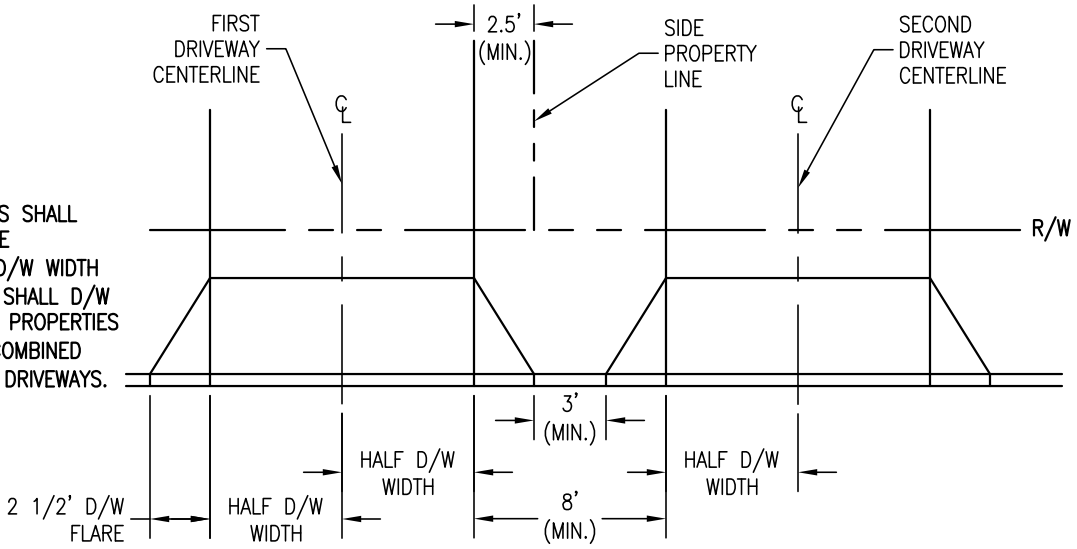

CONDITION 2

NO D/W CENTERLINE SHALL BE CLOSER THAN HALF D/W WIDTH PLUS 5.5' FROM THE CENTER OF ANY FIRE HYDRANT, UTILITY POLE OR STREET LIGHT STANDARD.

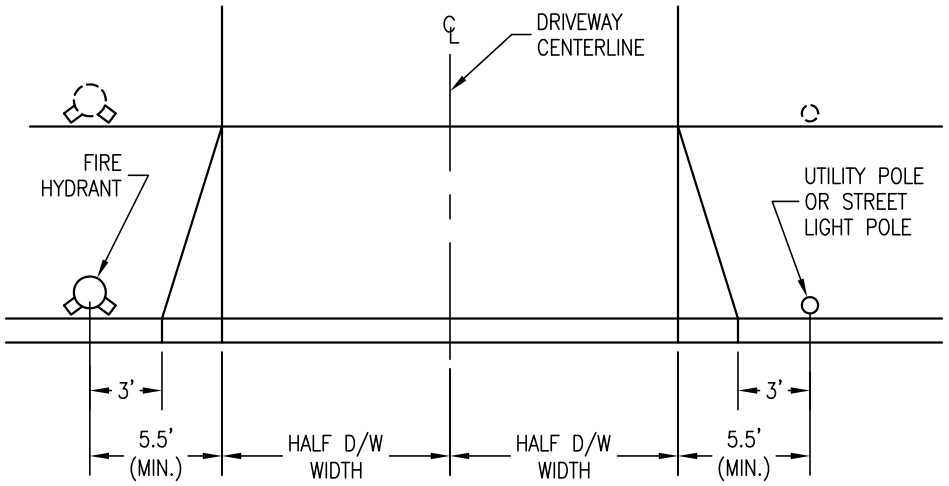

CONDITION 3

NO D/W CENTERLINE SHALL BE CLOSER THAN HALF D/W WIDTH PLUS 7.5' FROM THE CENTER OF A TRAFFIC SIGNAL POLE OR TREE.

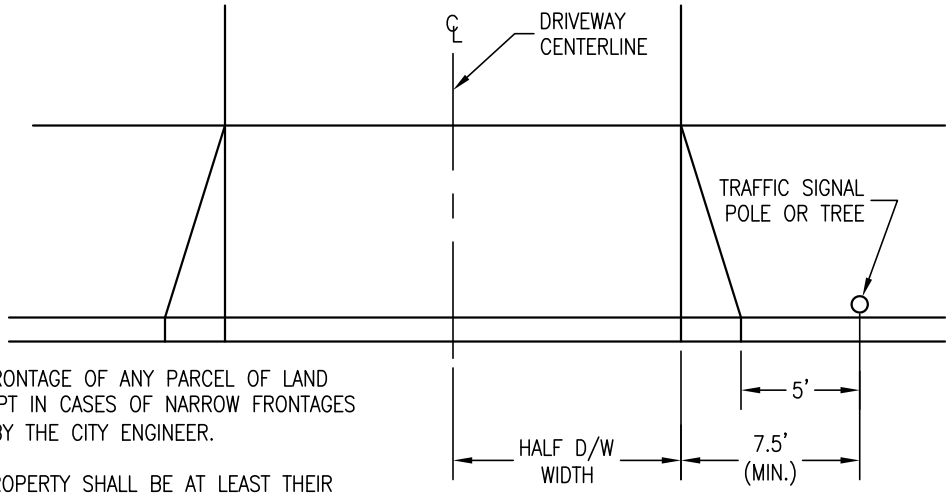

NOTE:

NOT MORE THAN 50% OF THE STREET FRONTAGE OF ANY PARCEL OF LAND SHALL BE DEVOTED TO DRIVEWAYS, EXCEPT IN CASES OF NARROW FRONTAGES (E.G., CUL-DE-SACS) WHEN APPROVED BY THE CITY ENGINEER.

DRIVEWAY CENTERLINES ON THE SAME PROPERTY SHALL BE AT LEAST THEIR COMBINED HALF WIDTHS PLUS 29 FEET APART.

DRAWN BY: K. TRAN	DRIVEWAY LOCATIONS	ST-2
CHECKED BY: F. AMIN		
APPROVED BY: G. GOMEZ		
DATE: OCTOBER 2013	CITY OF SANTA CLARA	PAGE: 2

CONDITION 1

WHERE A CURB RETURN RADIUS IS LESS THAN 35', NO PORTION OF ANY DRIVEWAY (D/W) SHALL BE LESS THAN 35' FROM THE POINT OF INTERSECTION OF THE PROJECTED FACE OF CURB LINES.

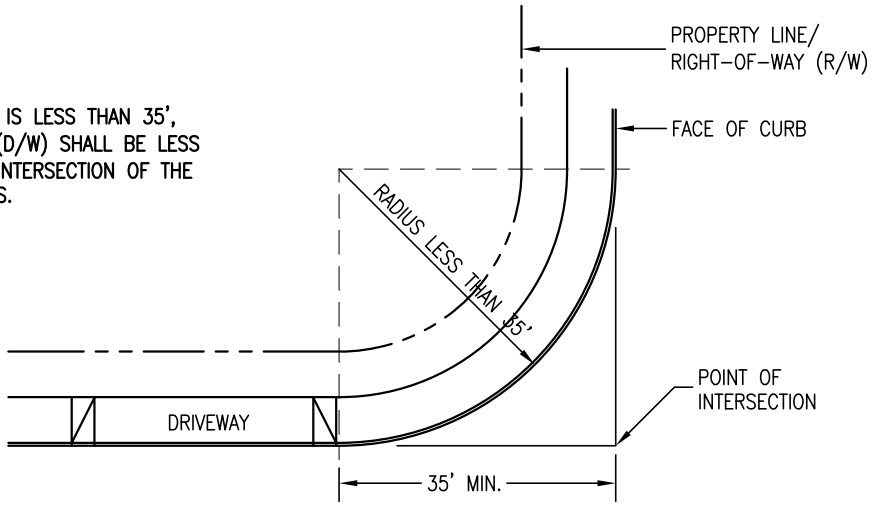

CONDITION 2

WHERE THE CURB RETURN RADIUS IS 35' TO 60' (INCLUSIVE), NO PORTION OF ANY D/W SHALL BE PERMITTED WITHIN THE CURB RETURN.

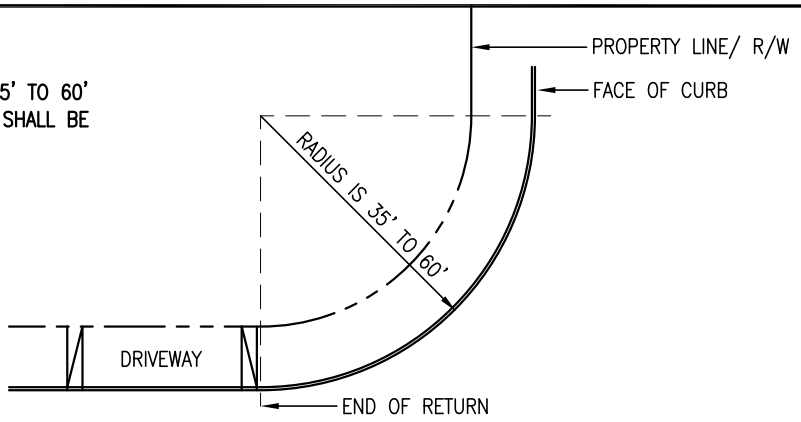

CONDITION 3

WHERE A CURB RETURN RADIUS IS GREATER THAN 60', D/W MAY ENCROACH UPON EACH ENDS OF THE RETURNS A MAXIMUM DISTANCE EQUAL TO 12.5% OR 1/8TH THE ARC LENGTH OF THE CURB RETURN, LEAVING 75% OF THE CURB RETURN LENGTH FREE FROM D/W ENCROACHMENTS.

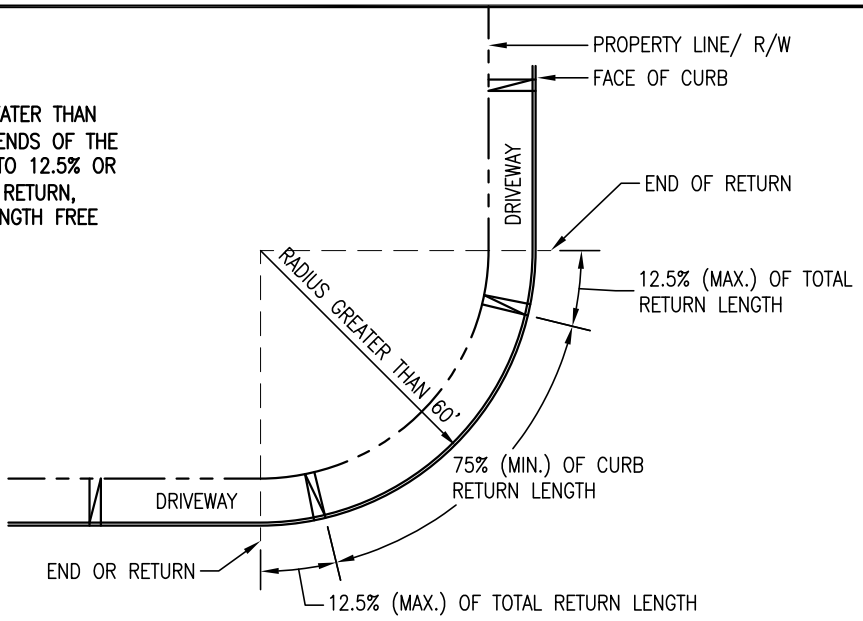

CONDITION 4

ON ALL CURB RETURNS WHERE CHANNELIZATION AND/OR COMPOUND CURVES EXIST, D/W LOCATION SHALL BE SUBJECT TO APPROVAL BY THE CITY ENGINEER.

DRAWN BY: K. TRAN	DRIVEWAY LOCATIONS AT CURB RETURNS	ST-3
CHECKED BY: F. AMIN		
APPROVED BY: G. GOMEZ		
DATE: OCTOBER 2013	CITY OF SANTA CLARA	PAGE: 3

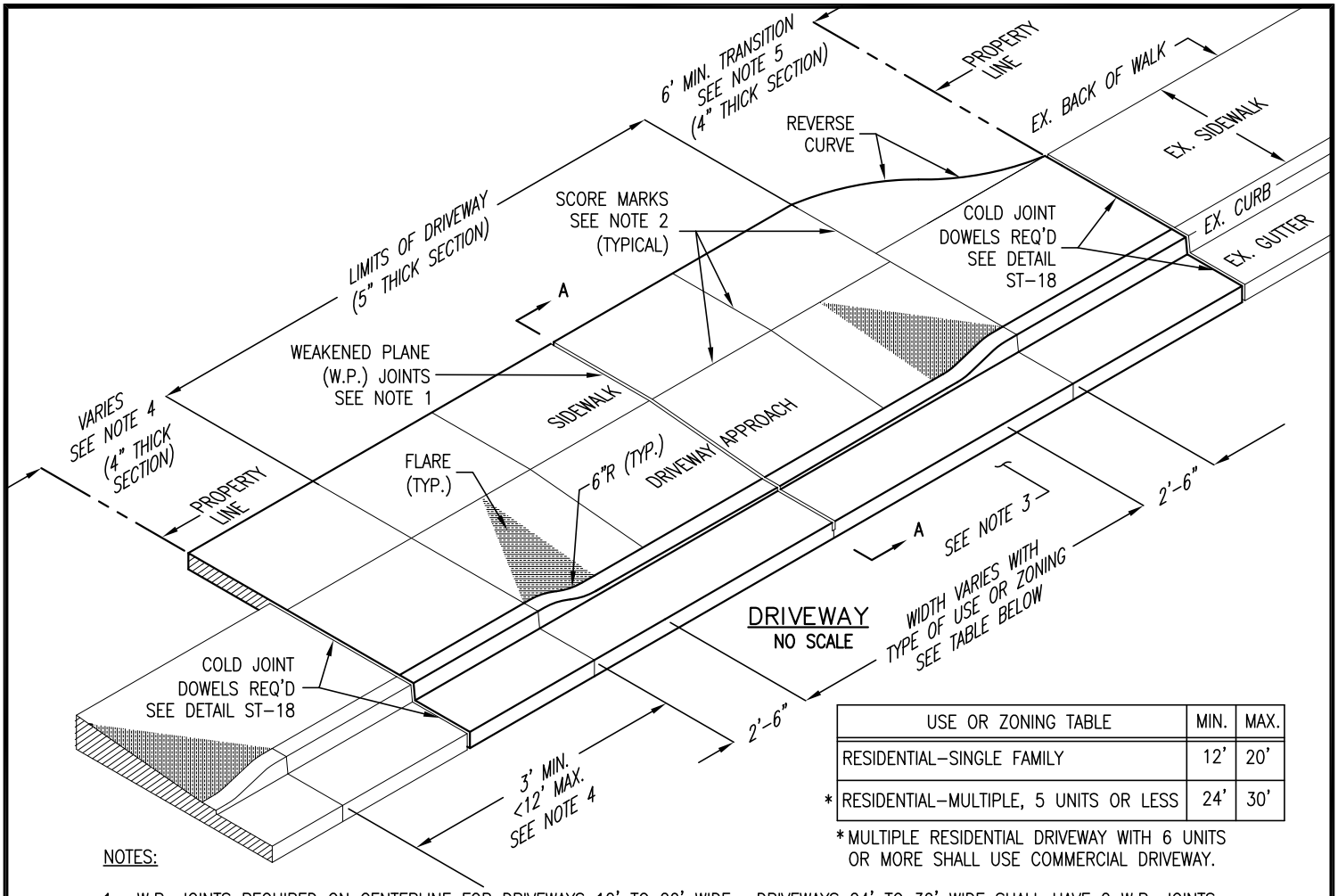

USE OR ZONING TABLE	MIN.	MAX.
RESIDENTIAL–SINGLE FAMILY	12'	20'
* RESIDENTIAL–MULTIPLE, 5 UNITS OR LESS	24'	30'

*MULTIPLE RESIDENTIAL DRIVEWAY WITH 6 UNITS OR MORE SHALL USE COMMERCIAL DRIVEWAY.

NOTES:

1. W.P. JOINTS REQUIRED ON CENTERLINE FOR DRIVEWAYS 12' TO 20' WIDE. DRIVEWAYS 24' TO 30' WIDE SHALL HAVE 2 W.P. JOINTS EVENLY SPACED (AT 1/3 AND 2/3 POINTS).
2. PLACE SCORE MARKS AT 1/4 POINTS ON DRIVEWAYS 12' TO 20' WIDE AND AT 1/6 POINTS ON DRIVEWAYS 24' TO 30' WIDE. SCORE MARK REQUIRED AT DRIVEWAY SLOPE BREAK PARALLEL TO EXISTING FACE OF CURB.
3. 18" WIDE BAND OF PAVEMENT SHALL BE REMOVED AND REPLACED. SEE NOTE 5 OF GENERAL NOTES (APPENDIX) FOR REQUIREMENTS.
4. WHERE THE DISTANCE BETWEEN NEW DRIVEWAY LIMIT AND PROPERTY LINE IS LESS THAN 6 FEET AT THE BACK OF DRIVEWAY AND THERE IS AN ADJACENT DRIVEWAY LESS THAN 12 FEET DISTANCE AWAY, THE SIDEWALK SHALL NOT TRANSITION. NEW SIDEWALK SHALL TERMINATE AT PROPERTY LINE OR ADJACENT DRIVEWAY TO MAINTAIN ADA PATHWAY.
5. WHERE THE DISTANCE BETWEEN NEW DRIVEWAY LIMIT AND PROPERTY LINE IS EQUAL TO OR GREATER THAN 6 FEET AT THE BACK OF DRIVEWAY AND THERE IS NO ADJACENT DRIVEWAY WITHIN 12 FEET DISTANCE OF NEW DRIVEWAY, THE SIDEWALK SHALL TRANSITION FROM BACK OF DRIVEWAY TO EXISTING SIDEWALK.
6. IF THE EXISTING ON–SITE IMPROVEMENTS DO NOT MATCH THE GRADE OF THE REAR OF THE NEW DRIVEWAY, SUFFICIENT EXISTING IMPROVEMENTS SHALL BE RECONSTRUCTED TO PRODUCE A SMOOTH, USABLE SURFACE WITH A CHANGE IN GRADE NOT EXCEEDING 10%.

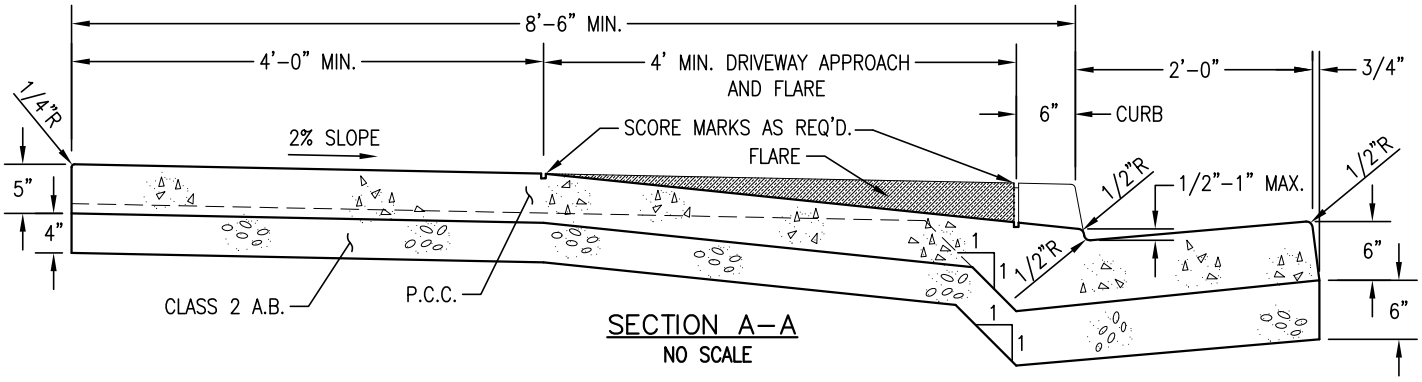

SECTION A–A
NO SCALE

DRAWN BY: K. TRAN	RESIDENTIAL DRIVEWAY WITH ATTACHED SIDEWALK	ST-4
CHECKED BY: F. AMIN		
APPROVED BY: G. GOMEZ		
DATE: MAY 2015	CITY OF SANTA CLARA	PAGE: 4

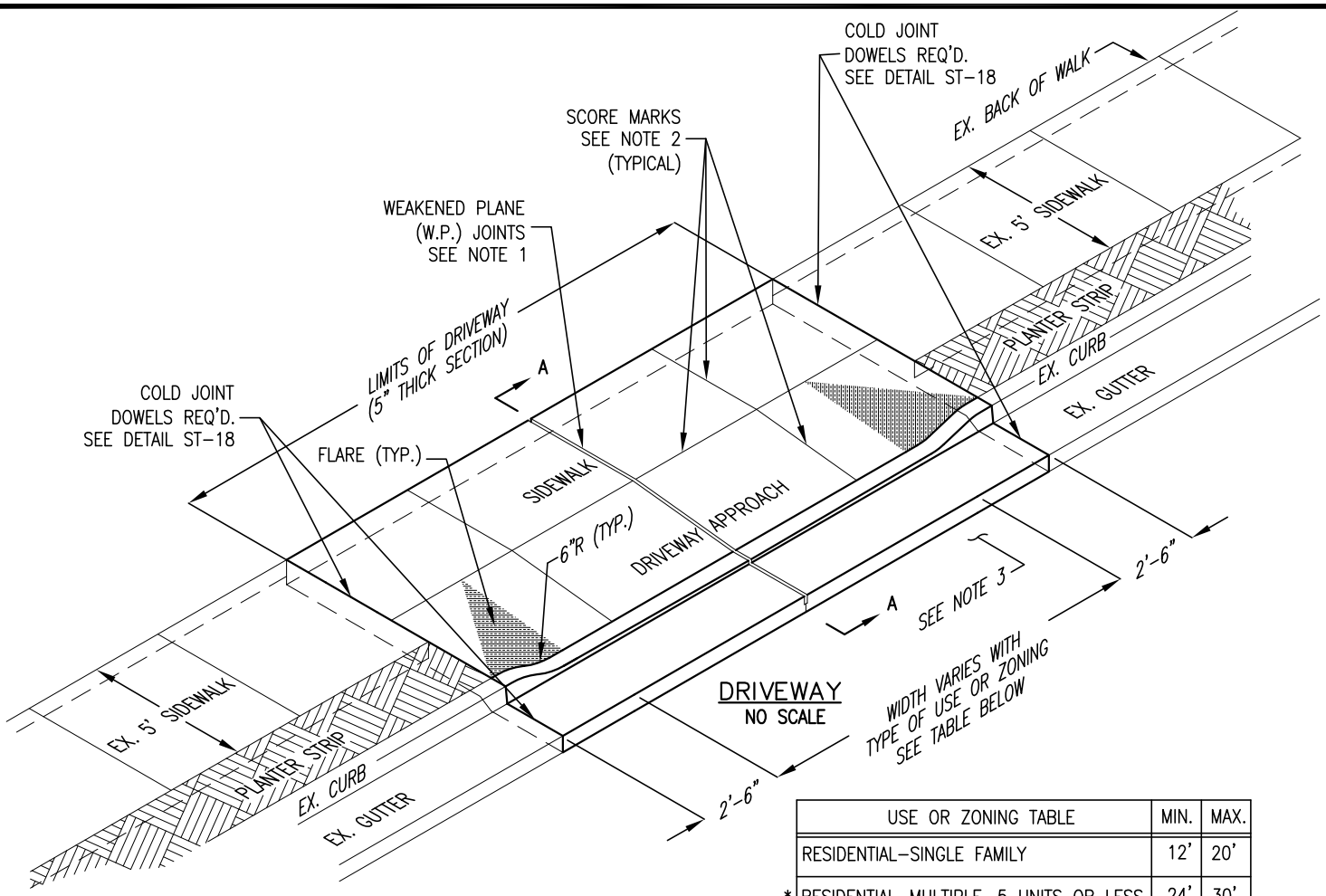

USE OR ZONING TABLE	MIN.	MAX.
RESIDENTIAL–SINGLE FAMILY	12'	20'
* RESIDENTIAL–MULTIPLE, 5 UNITS OR LESS	24'	30'

* MULTIPLE RESIDENTIAL DRIVEWAY WITH 6 UNITS OR MORE SHALL USE COMMERCIAL DRIVEWAY.

NOTES:

1. W.P. JOINTS REQUIRED ON CENTERLINE FOR DRIVEWAYS 12' TO 20' WIDE. DRIVEWAYS 24' TO 30' WIDE SHALL HAVE 2 W.P. JOINTS EVENLY SPACED (AT 1/3 AND 2/3 POINTS).
2. PLACE SCORE MARKS AT 1/4 POINTS ON DRIVEWAYS 12' TO 20' WIDE AND AT 1/6 POINTS ON DRIVEWAYS 24' TO 30' WIDE. SCORE MARK REQUIRED AT DRIVEWAY SLOPE BREAK PARALLEL TO EXISTING FACE OF CURB.
3. 18" WIDE BAND OF PAVEMENT SHALL BE REMOVED AND REPLACED. SEE NOTE 5 OF GENERAL NOTES (APPENDIX) FOR REQUIREMENTS.
4. IF THE EXISTING ON–SITE IMPROVEMENTS DO NOT MATCH THE GRADE OF THE REAR OF THE NEW DRIVEWAY, SUFFICIENT EXISTING IMPROVEMENTS SHALL BE RECONSTRUCTED TO PRODUCE A SMOOTH, USABLE SURFACE WITH A CHANGE IN GRADE NOT EXCEEDING 10%.

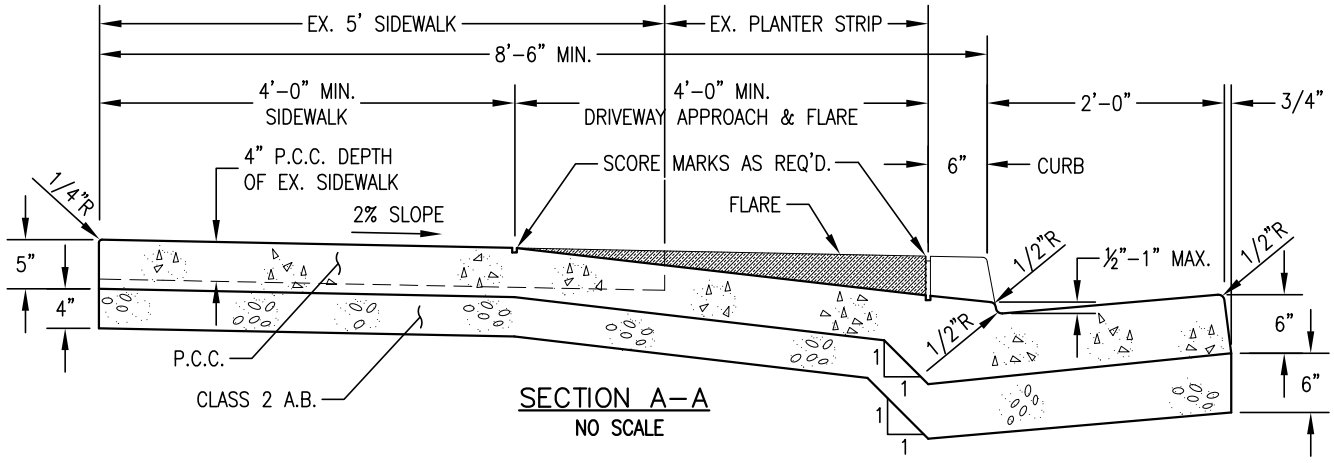

DRAWN BY: K. TRAN	RESIDENTIAL DRIVEWAY WITH SEPARATED SIDEWALK	ST-5
CHECKED BY: F. AMIN		
APPROVED BY: G. GOMEZ		
DATE: MAY 2015	CITY OF SANTA CLARA	PAGE: 5

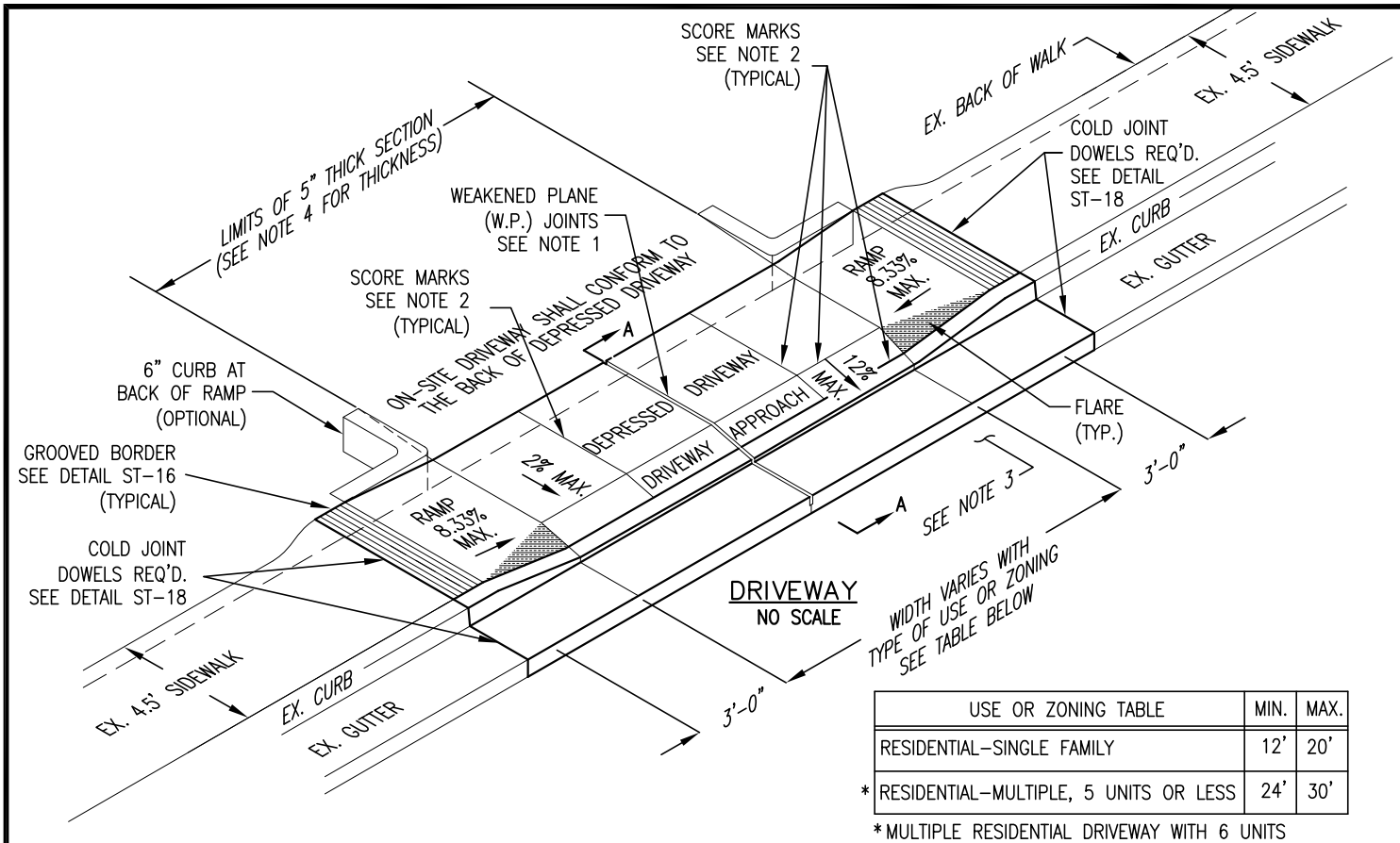

USE OR ZONING TABLE	MIN.	MAX.
RESIDENTIAL–SINGLE FAMILY	12'	20'
* RESIDENTIAL–MULTIPLE, 5 UNITS OR LESS	24'	30'

*MULTIPLE RESIDENTIAL DRIVEWAY WITH 6 UNITS OR MORE SHALL USE COMMERCIAL DRIVEWAY.

NOTES:

1. W.P. JOINTS REQUIRED ON CENTERLINE FOR DRIVEWAYS 12' TO 20' WIDE. DRIVEWAYS 24' TO 30' WIDE SHALL HAVE 2 W.P. JOINTS EVENLY SPACED (AT 1/3 AND 2/3 POINTS).
2. PLACE SCORE MARKS AT 1/4 POINTS ON DRIVEWAYS 12' TO 20' WIDE AND AT 1/6 POINTS ON DRIVEWAYS 24' TO 30' WIDE.
3. 18" WIDE BAND OF PAVEMENT SHALL BE REMOVED AND REPLACED. SEE NOTE 5 OF GENERAL NOTES (APPENDIX) FOR REQUIREMENTS.
4. DEPRESSED DRIVEWAY, DRIVEWAY APPROACH, GROOVED BORDERS, AND RAMPS SHALL HAVE A THICKNESS OF 5" P.C.C. OVER 4" A.B. GROOVED BORDERS, RAMPS, DEPRESSED DRIVEWAY, DRIVEWAY APPROACH, CURB AND GUTTER SHALL BE MONOLITHIC.
5. IF THE EXISTING ON–SITE IMPROVEMENTS DO NOT MATCH THE GRADE OF THE REAR OF THE NEW DRIVEWAY, SUFFICIENT EXISTING IMPROVEMENTS SHALL BE RECONSTRUCTED TO PRODUCE A SMOOTH, USABLE SURFACE WITH A CHANGE IN GRADE NOT EXCEEDING 10%.

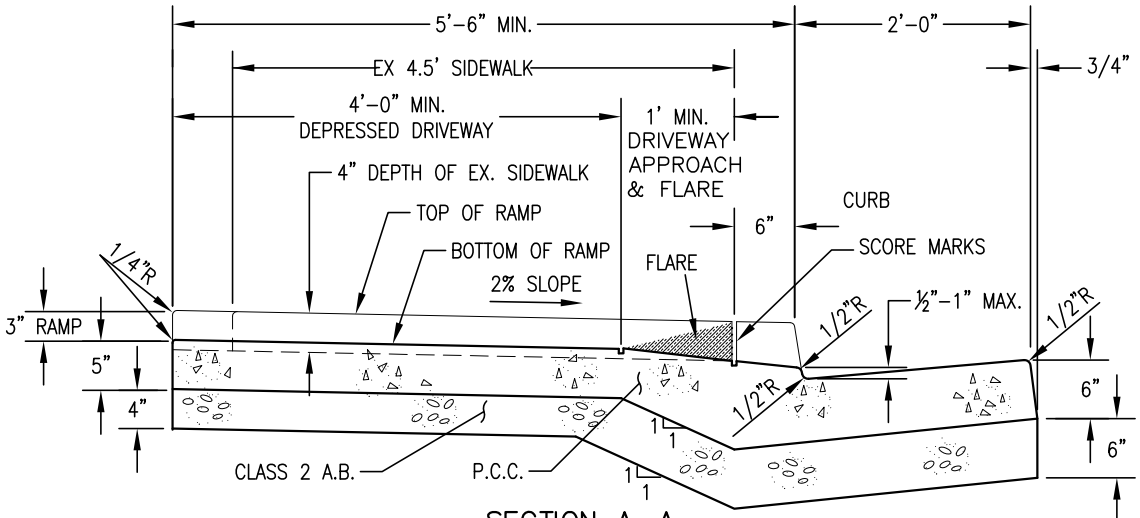

SECTION A–A
NO SCALE

DRAWN BY: K. TRAN	DEPRESSED DRIVEWAY FOR EX. 5' ATTACHED SIDEWALK	ST-6
CHECKED BY: F. AMIN		
APPROVED BY: G. GOMEZ		
DATE: MAY 2015	CITY OF SANTA CLARA	PAGE: 6

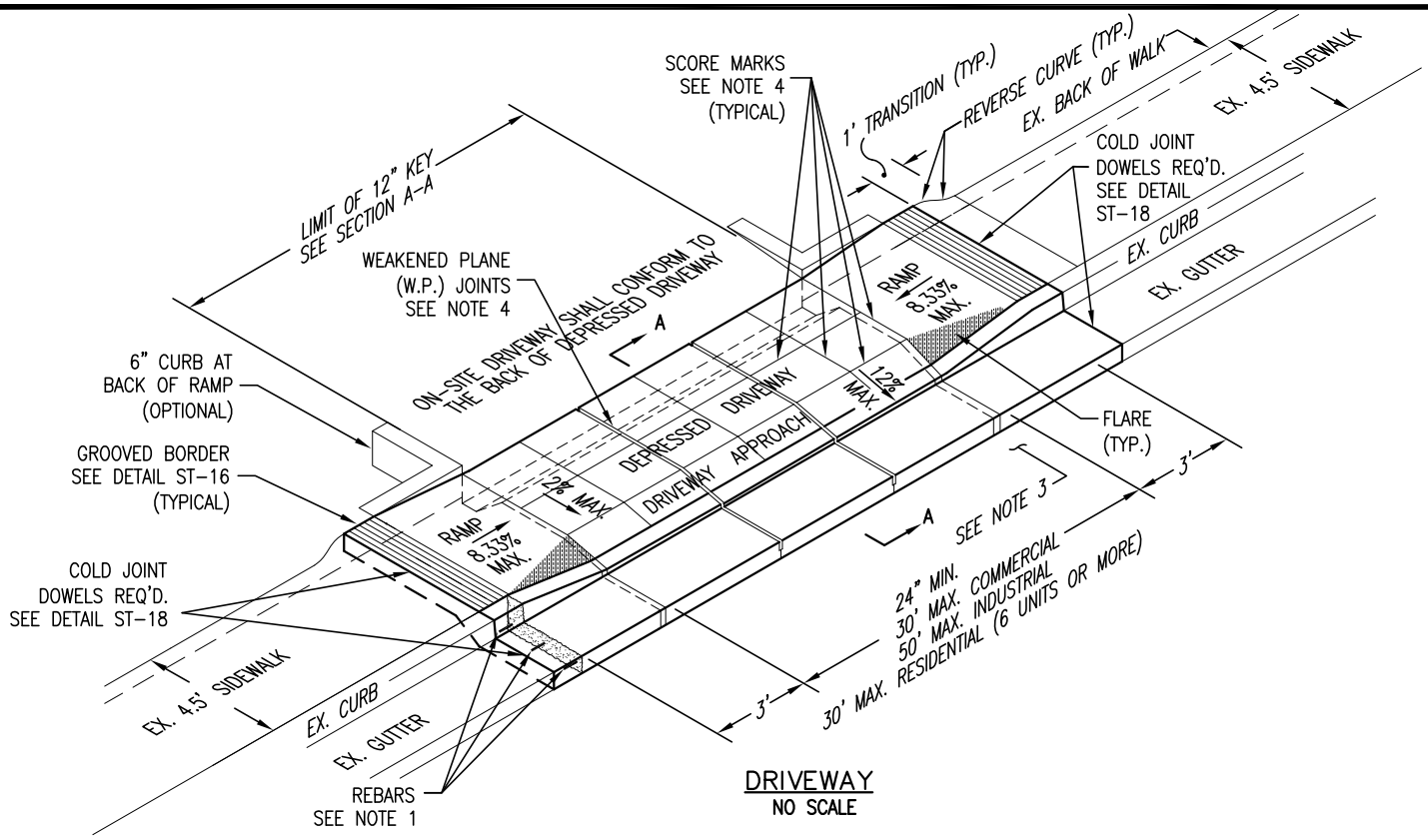

DRIVEWAY
NO SCALE

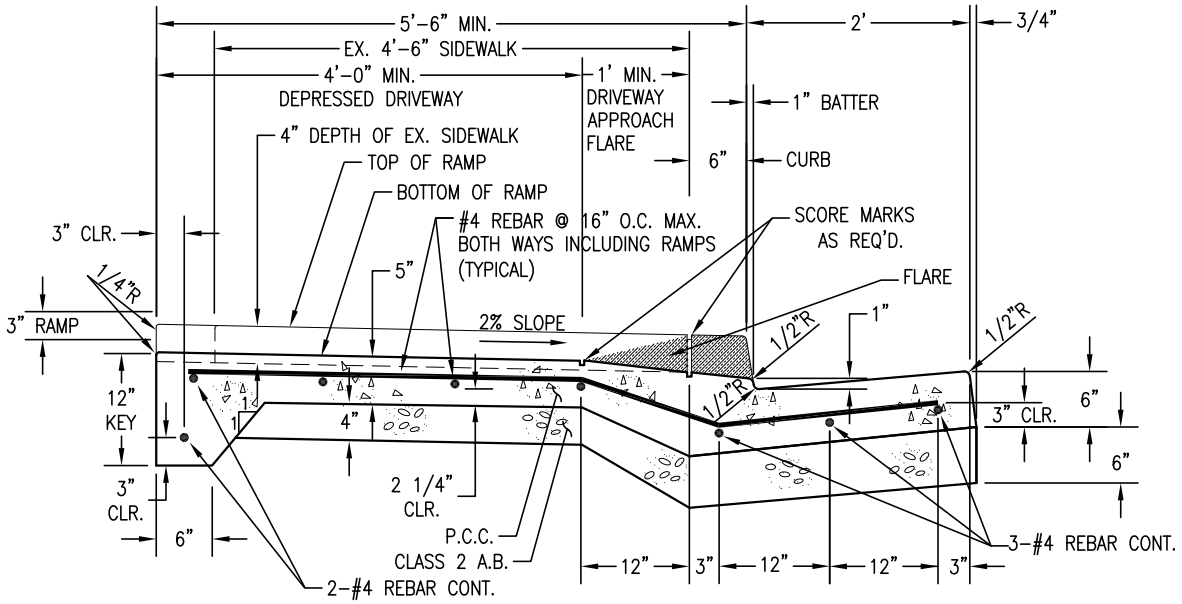

SECTION A-A
NO SCALE

NOTES:

1. END REBAR 3" FROM COLD JOINT FOR GUTTER AND 12" FROM COLD JOINT FOR RAMPS.
2. DEPRESSED DRIVEWAY, DRIVEWAY APPROACH, GROOVED BORDERS, AND RAMPS SHALL HAVE A THICKNESS OF 5" P.C.C. OVER 4" A.B. GROOVED BORDERS, RAMPS, DEPRESSED DRIVEWAY, DRIVEWAY APPROACH, CURB AND GUTTER SHALL BE MONOLITHIC.
3. 18" WIDE BAND OF PAVEMENT SHALL BE REMOVED AND REPLACED. SEE NOTE 5 OF GENERAL NOTES (APPENDIX), FOR REQUIREMENTS.
4. JOINT/SCORE MARK: SEE TABLE ON ST-8.
5. USE OF DETAIL ST-7 IS ALLOWED ONLY WITH WRITTEN APPROVAL OF CITY ENGINEER.
6. IF THE EXISTING ON-SITE IMPROVEMENTS DO NOT MATCH THE GRADE OF THE REAR OF THE NEW DRIVEWAY, SUFFICIENT EXISTING IMPROVEMENTS SHALL BE RECONSTRUCTED TO PRODUCE A SMOOTH, USABLE SURFACE WITH A CHANGE IN GRADE NOT EXCEEDING 10%.

DRAWN BY: K. TRAN	DEPRESSED COMMERCIAL DRIVEWAY FOR EX. 5' ATTACHED SIDEWALK	ST-7
CHECKED BY: F. AMIN		
APPROVED BY: G. GOMEZ		
DATE: MAY 2015	CITY OF SANTA CLARA	PAGE: 7

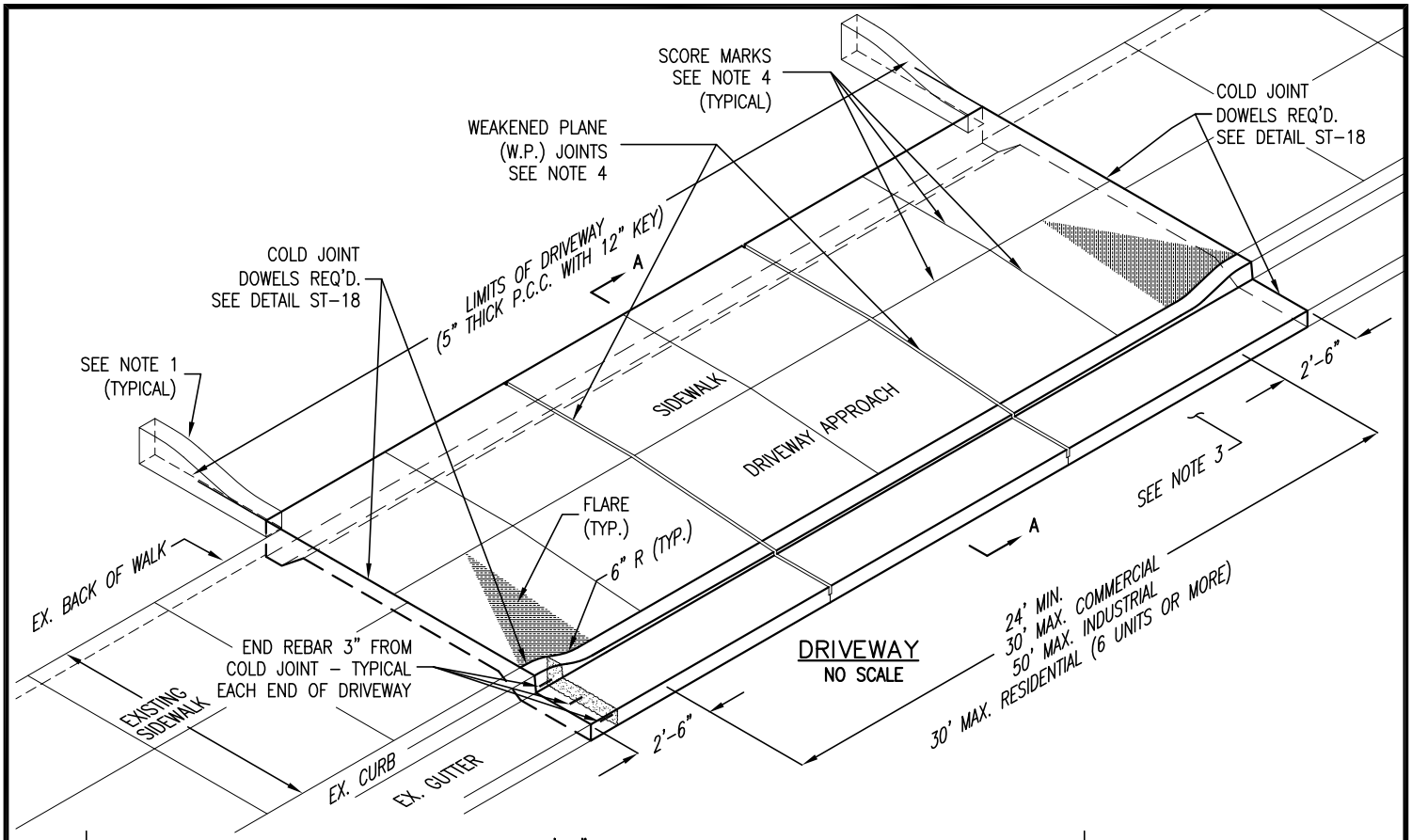

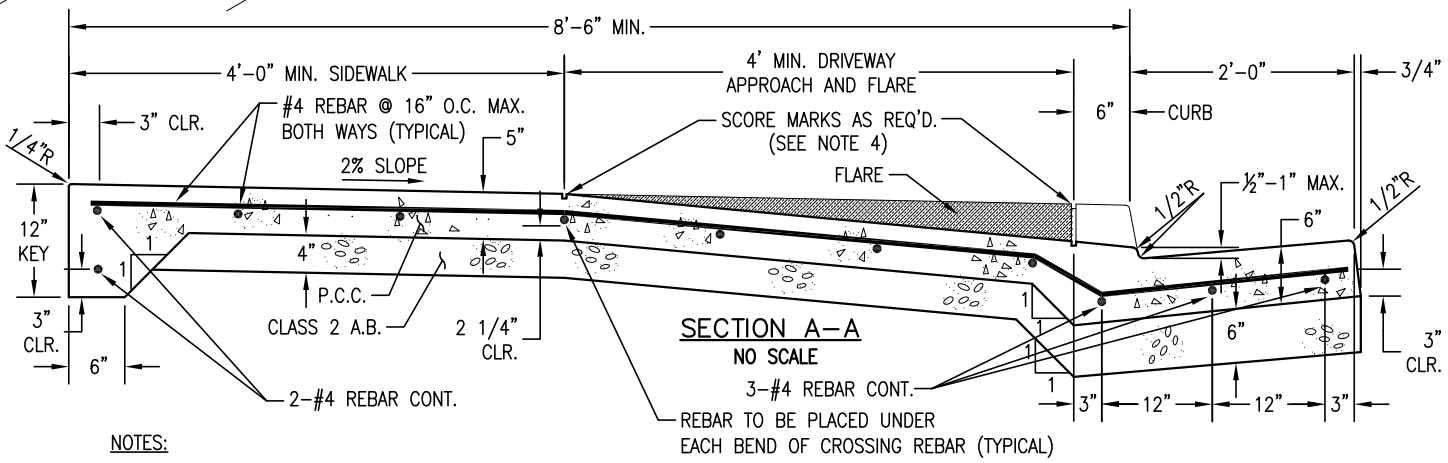

NOTES:

1. CONCRETE CURB SHALL NOT ENCROACH INTO PUBLIC RIGHT-OF-WAY AND SHALL BE FLUSH AT BACK OF WALK.
2. COMMERCIAL DRIVEWAY SHALL BE INSTALLED IN ZONES DESIGNATED COMMERCIAL, INDUSTRIAL, AND RESIDENTIAL WITH 6 UNITS OR MORE.
3. 18" WIDE BAND OF PAVEMENT SHALL BE REMOVED AND REPLACED. SEE NOTE 5 OF GENERAL NOTES (APPENDIX) FOR REQUIREMENTS.
4. JOINT/SCORE MARK TABLE:

DRIVEWAY WIDTH		WEAKENED PLANE JOINT		SCORE MARKS	
MIN.	MAX.	NO. OF JOINTS	LOCATION POINT	NO. OF MARKS	LOCATION POINT
24'	30'	2	1/3, 2/3	3	1/6, 1/2, 5/6
>30'	40'	3	1/4, 1/2, 3/4	4	1/8, 3/8, 5/8, 7/8
>40'	50'	4	1/5, 2/5, 3/5, 4/5	5	1/10, 3/10, 1/2, 7/10, 9/10
		SCORE MARK REQUIRED AT DRIVEWAY SLOPE BREAK PARALLEL TO EXISTING FACE OF CURB			

5. IF THE EXISTING ON-SITE IMPROVEMENTS DO NOT MATCH THE GRADE OF THE REAR OF THE NEW DRIVEWAY, SUFFICIENT EXISTING IMPROVEMENTS SHALL BE RECONSTRUCTED TO PRODUCE A SMOOTH, USABLE SURFACE WITH A CHANGE IN GRADE NOT EXCEEDING 10%.

DRAWN BY: K. TRAN	COMMERCIAL DRIVEWAY WITH/ WITHOUT SEPARATED SIDEWALK	ST-8
CHECKED BY: F. AMIN		
APPROVED BY: G. GOMEZ		
DATE: MAY 2015	CITY OF SANTA CLARA	PAGE: 8

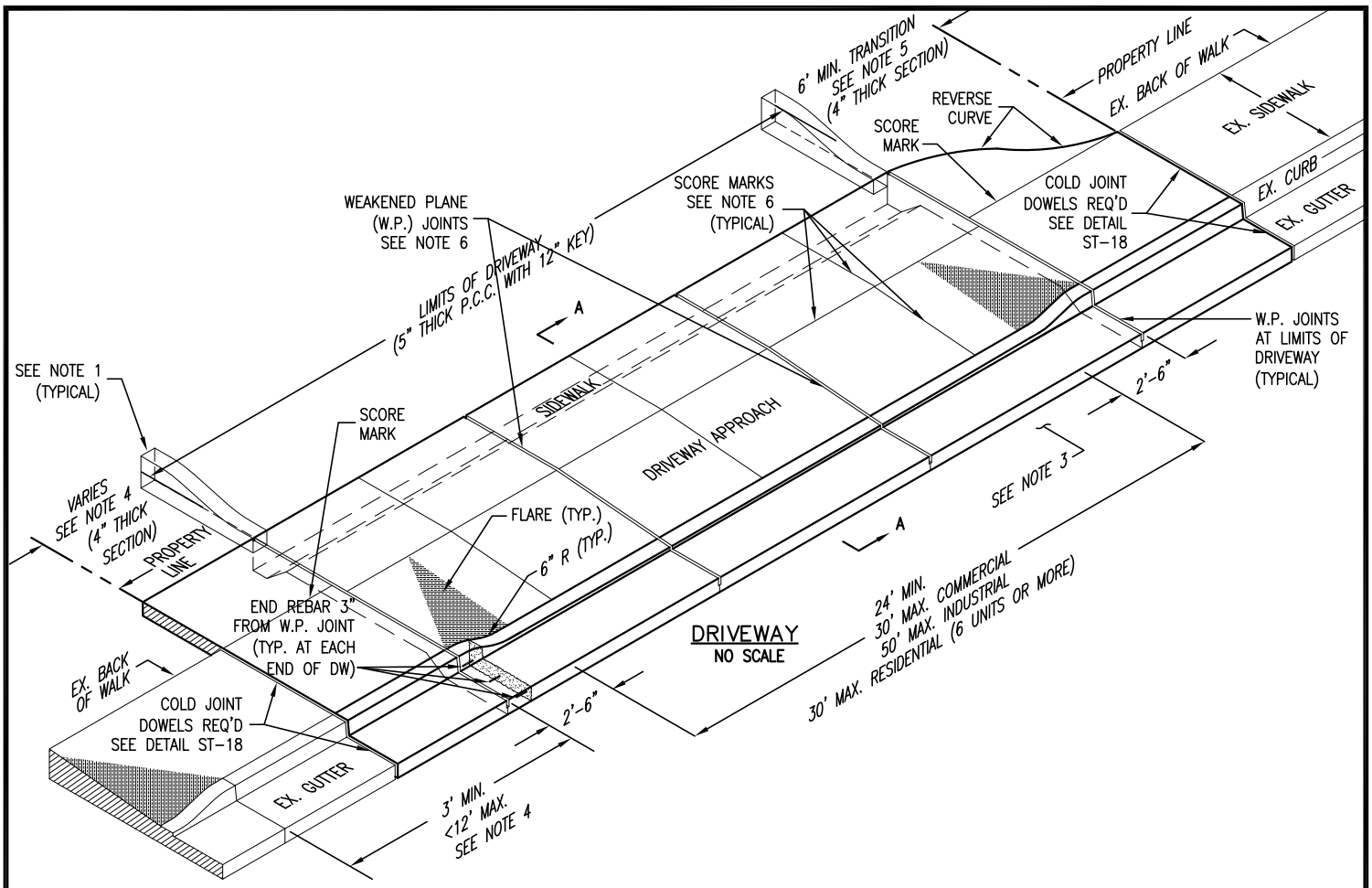

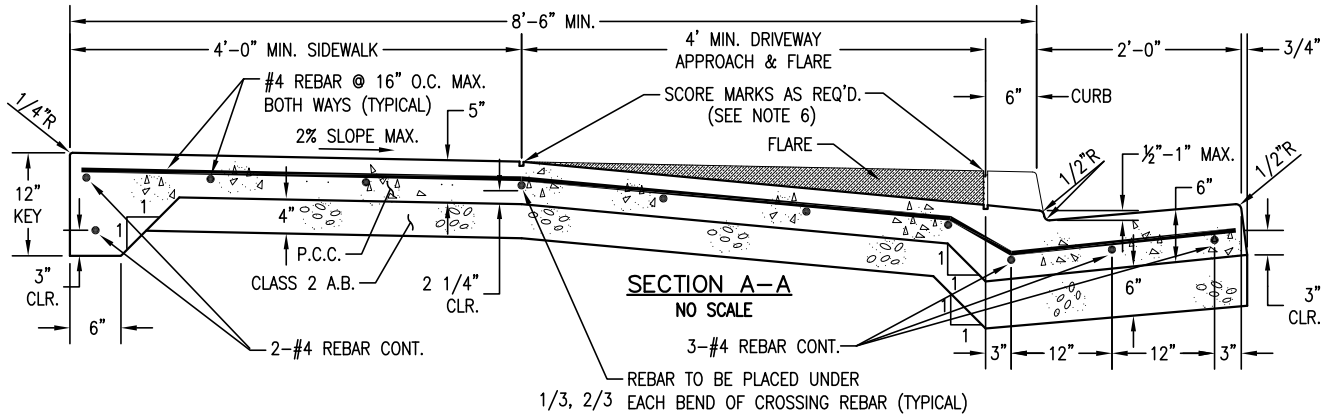

NOTES:

1. CONCRETE CURB SHALL NOT ENCROACH INTO PUBLIC RIGHT-OF-WAY AND SHALL BE FLUSH AT BACK OF WALK.
2. COMMERCIAL DRIVEWAY SHALL BE INSTALLED IN ZONES DESIGNATED COMMERCIAL, INDUSTRIAL, AND RESIDENTIAL WITH 6 UNITS OR MORE.
3. 18" WIDE BAND OF PAVEMENT SHALL BE REMOVED AND REPLACED. SEE NOTE 5 OF GENERAL NOTES (APPENDIX) FOR REQUIREMENTS.
4. WHERE THE DISTANCE BETWEEN NEW DRIVEWAY LIMIT AND PROPERTY LINE IS LESS THAN 6 FEET AT THE BACK OF DRIVEWAY OR LESS THAN 12 FEET FROM AN ADJACENT DRIVEWAY LIMIT AT THE BACK OF DRIVEWAY, THE SIDEWALK SHALL NOT TRANSITION. NEW SIDEWALK SHALL TERMINATE AT PROPERTY LINE OR ADJACENT DRIVEWAY TO MAINTAIN ADA PATHWAY.
5. WHERE THE DISTANCE BETWEEN NEW DRIVEWAY LIMIT AND PROPERTY LINE IS EQUAL TO OR GREATER THAN 6 FEET AT THE BACK OF DRIVEWAY OR EQUAL TO OR GREATER THAN 12 FEET FROM AN ADJACENT DRIVEWAY LIMIT AT THE BACK OF DRIVEWAY, THE SIDEWALK SHALL TRANSITION FROM BACK OF DRIVEWAY TO EXISTING SIDEWALK.
6. JOINT/SCORE MARK: SEE TABLE ON DETAIL ST-8.
7. IF THE EXISTING ON-SITE IMPROVEMENTS DO NOT MATCH THE GRADE OF THE REAR OF THE NEW DRIVEWAY, SUFFICIENT EXISTING IMPROVEMENTS SHALL BE RECONSTRUCTED TO PRODUCE A SMOOTH, USABLE SURFACE WITH A CHANGE IN GRADE NOT EXCEEDING 10%.

DRAWN BY: K. TRAN	COMMERCIAL DRIVEWAY WITH ATTACHED SIDEWALK	ST-9
CHECKED BY: F. AMIN		
APPROVED BY: G. GOMEZ		
DATE: MAY 2015	CITY OF SANTA CLARA	PAGE: 9

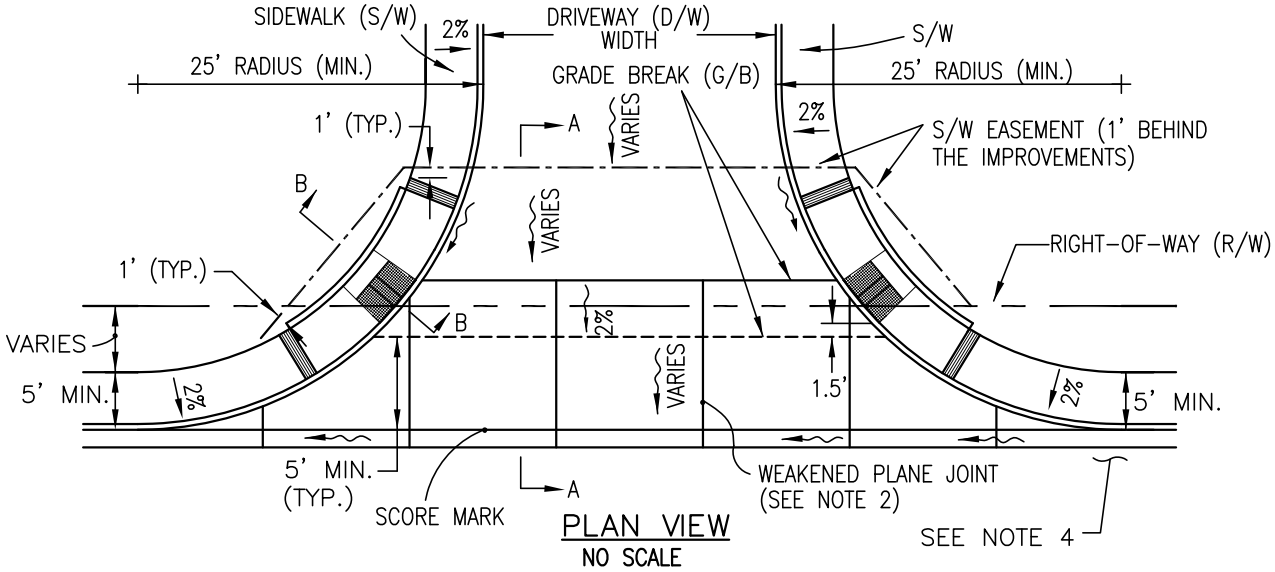

PLAN VIEW
NO SCALE

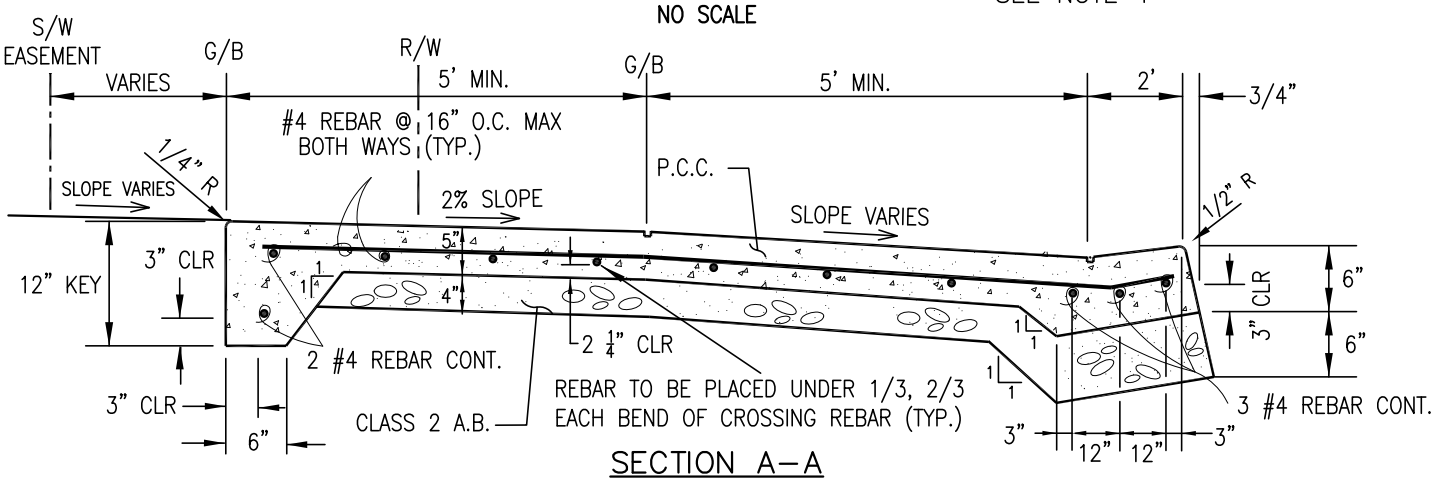

SECTION A–A
NO SCALE

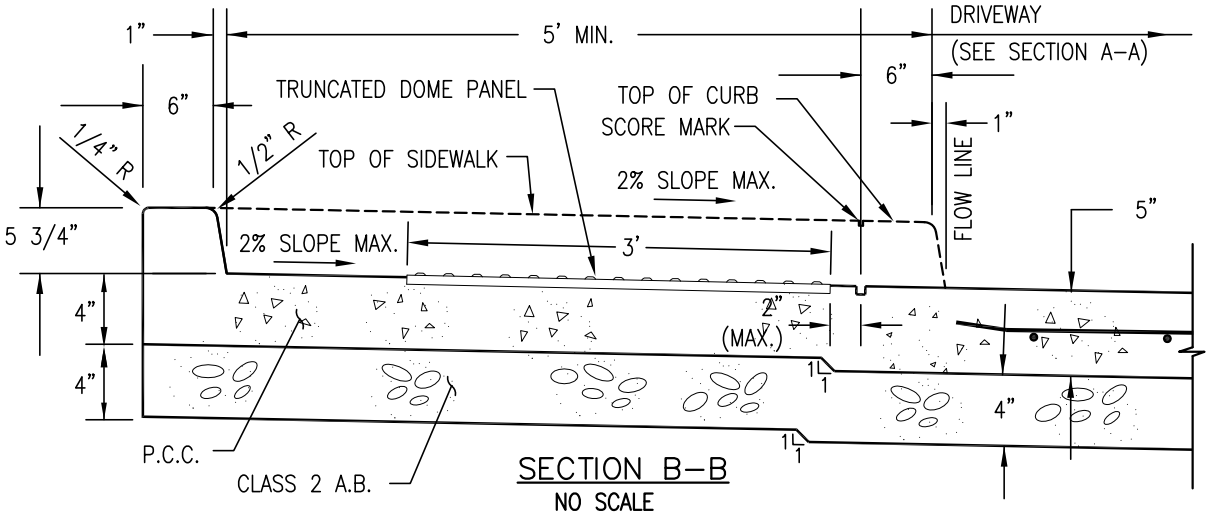

SECTION B–B
NO SCALE

NOTES:
1. USE OF CURB–RETURN DRIVEWAY ALLOWED ONLY WITH WRITTEN APPROVAL OF CITY ENGINEER.
2. SEE DETAIL ST–8 FOR D/W WIDTH, JOINTS, AND SCORE MARKS. JOINTS/SCORE MARKS PATTERNS SHALL CONTINUE TO THE AREA OUTSIDE OF D/W WIDTH.
3. SEE DETAIL ST–14 FOR CURB RAMP CONSTRUCTION AND NOTES.
4. 18" WIDE BAND OF PAVEMENT SHALL BE REMOVED AND REPLACED. SEE NOTE 5 OF GENERAL NOTES (APPENDIX) FOR REQUIREMENTS.

DRAWN BY: K. TRAN	CURB-RETURN DRIVEWAY	ST-10
CHECKED BY: F. AMIN		
APPROVED BY: F. AMIN		
DATE: JANUARY 2016	CITY OF SANTA CLARA	PAGE: 10

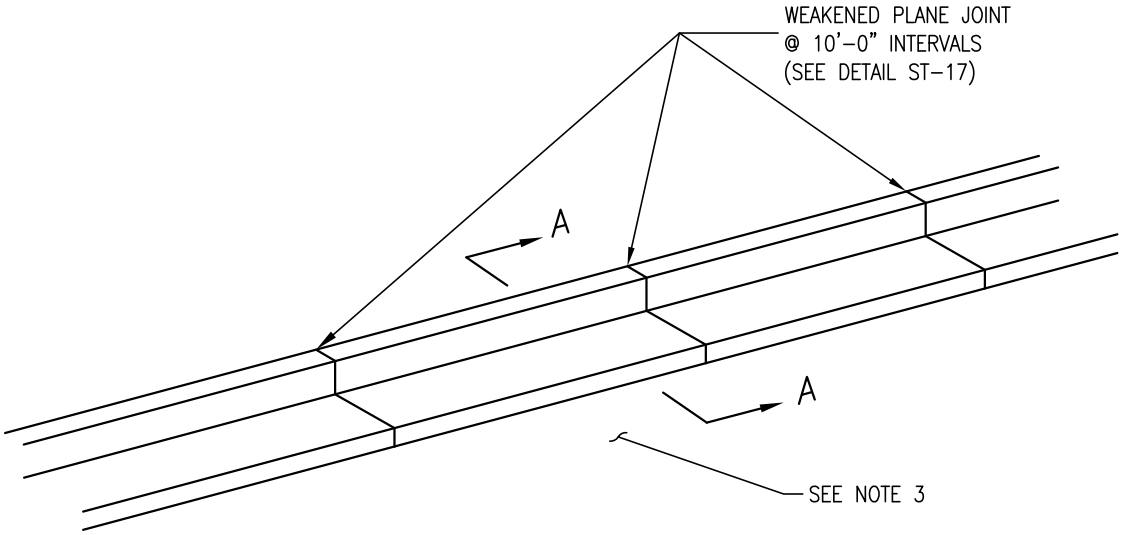

CURB GUTTER

NO SCALE

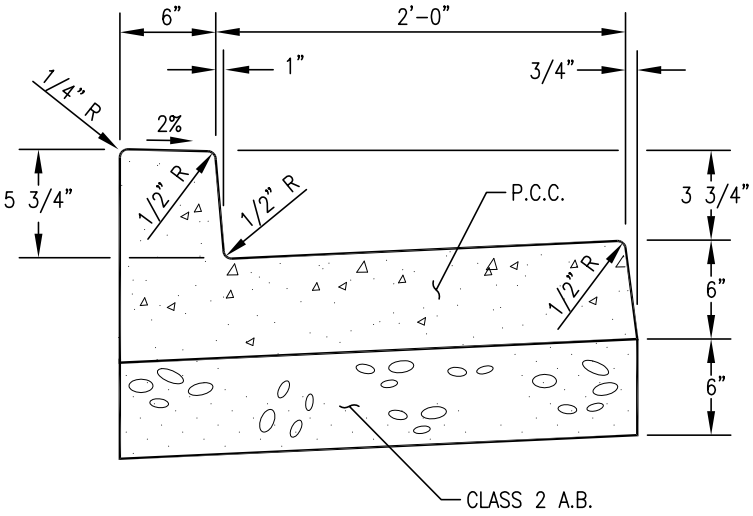

SECTION A–A

NO SCALE

NOTES:

1. EXPANSION JOINTS (SEE DETAIL ST–17) SHALL BE INSTALLED AT MAJOR STRUCTURES AND CURB RETURNS.
2. TOLERANCE OF THE VERTICAL DIMENSION AT FACE OF CURB AND LIP OF GUTTER SHALL BE 1/4"±.
3. 18" WIDE BAND OF PAVEMENT SHALL BE REMOVED AND REPLACED. SEE NOTE 5 OF GENERAL NOTES (APPENDIX) FOR REQUIREMENTS.

DRAWN BY: K. TRAN	MONOLITHIC CURB AND GUTTER	ST-11
CHECKED BY: F. AMIN		
APPROVED BY: G. GOMEZ		
DATE: OCTOBER 2013	CITY OF SANTA CLARA	PAGE: 11

Y	L	R
1'	20'	25'
2'	20'	13'
3'	20'	9'
4'	25'	11'

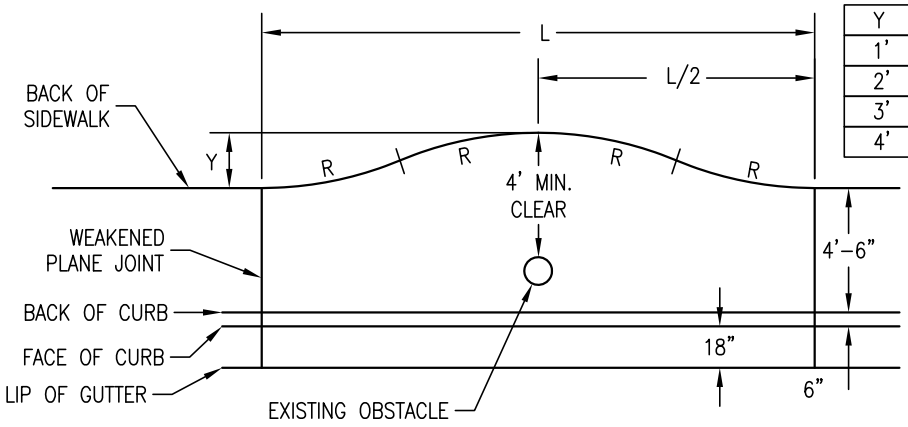

SIDEWALK FLARE AT OBSTRUCTION

NO SCALE

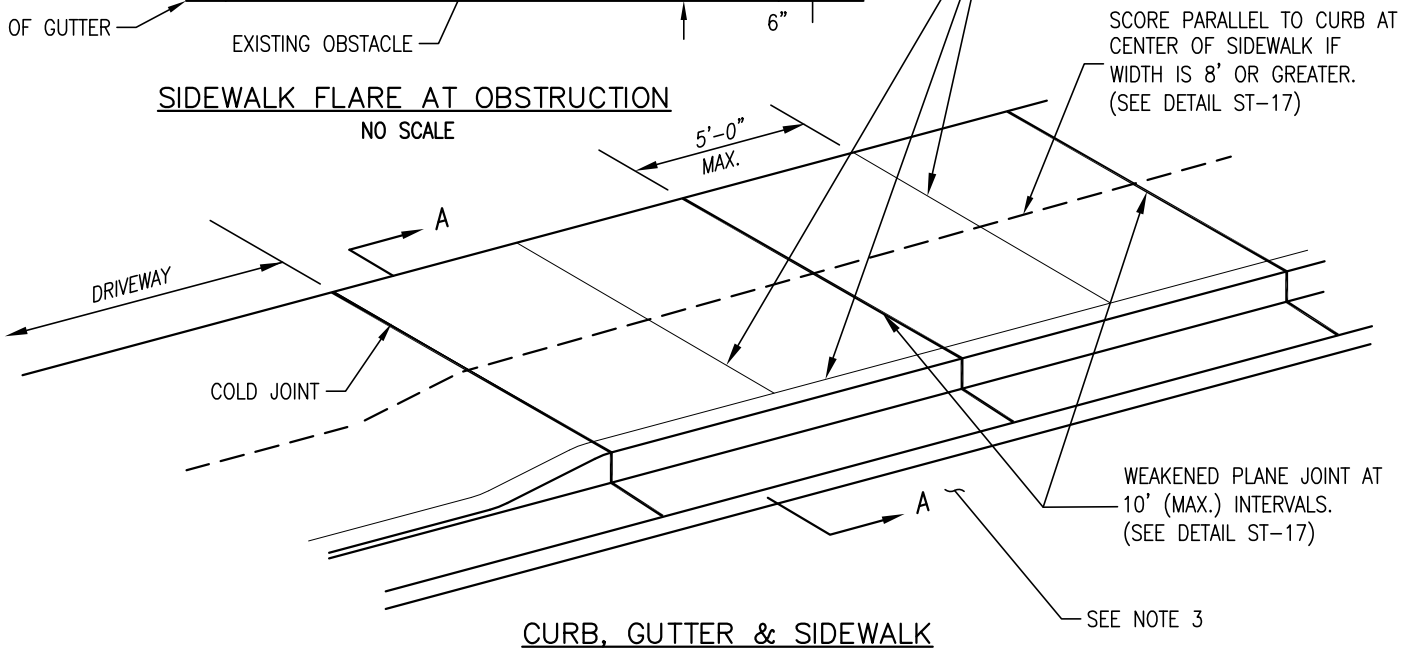

CURB, GUTTER & SIDEWALK

NO SCALE

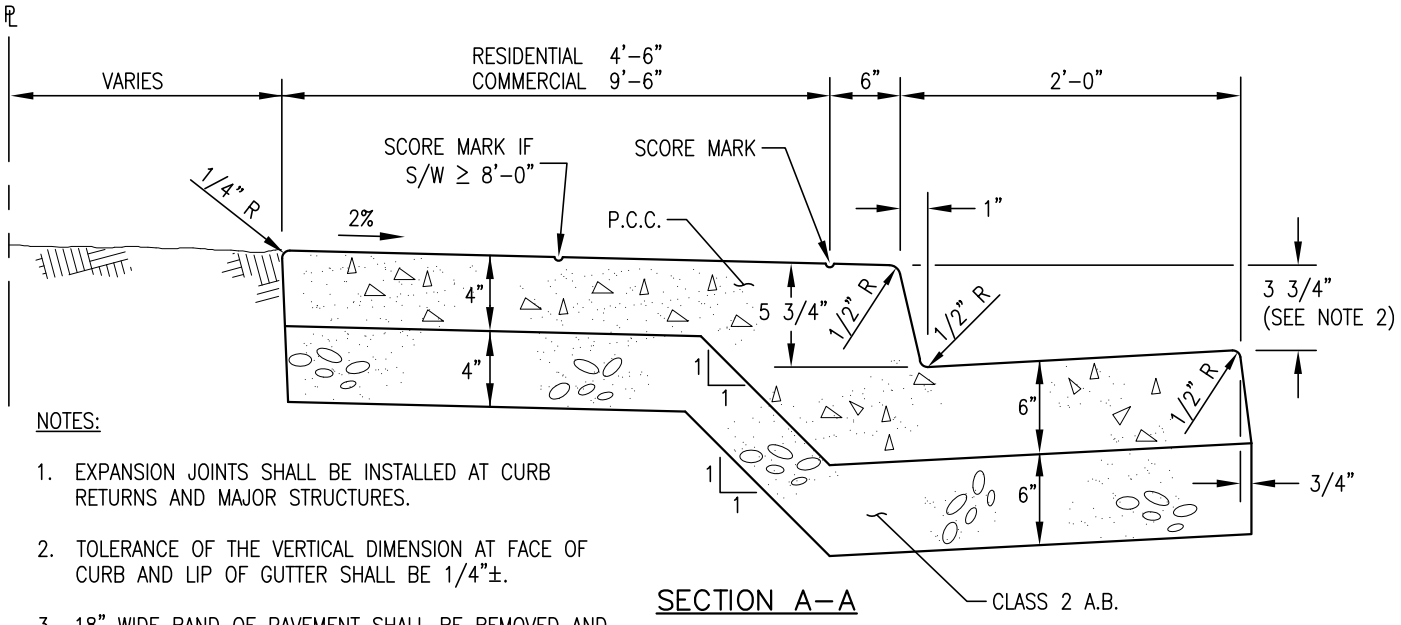

NOTES:

1. EXPANSION JOINTS SHALL BE INSTALLED AT CURB RETURNS AND MAJOR STRUCTURES.
2. TOLERANCE OF THE VERTICAL DIMENSION AT FACE OF CURB AND LIP OF GUTTER SHALL BE 1/4"±.
3. 18" WIDE BAND OF PAVEMENT SHALL BE REMOVED AND REPLACED. SEE NOTE 5 OF GENERAL NOTES (APPENDIX) FOR REQUIREMENTS.

SECTION A–A

NO SCALE

DRAWN BY: K. TRAN	MONOLITHIC CURB, GUTTER AND SIDEWALK	ST-12
CHECKED BY: F. AMIN		
APPROVED BY: G. GOMEZ		
DATE: OCTOBER 2013	CITY OF SANTA CLARA	PAGE: 12

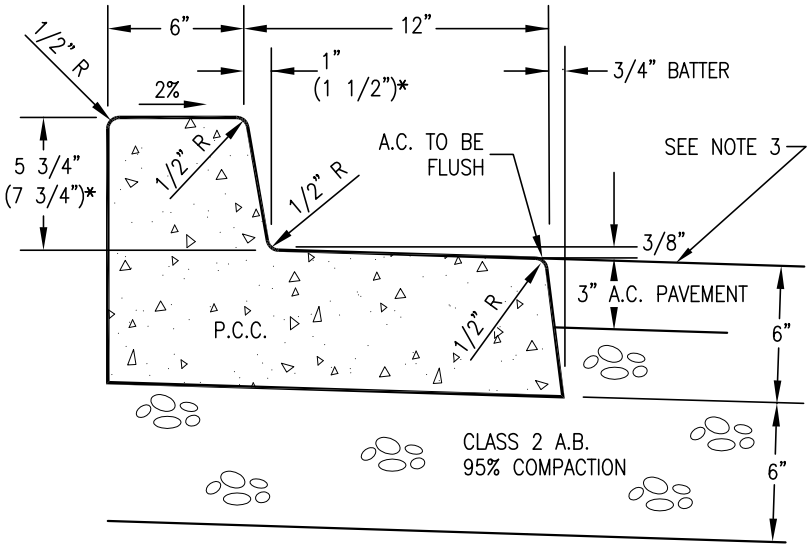

TYPE A–6 & A–8 CURBS

NO SCALE

NOTE: *DIMENSIONS SHOWN IN PARENTHESES ABOVE ARE FOR TYPE A–8 CURB ONLY.

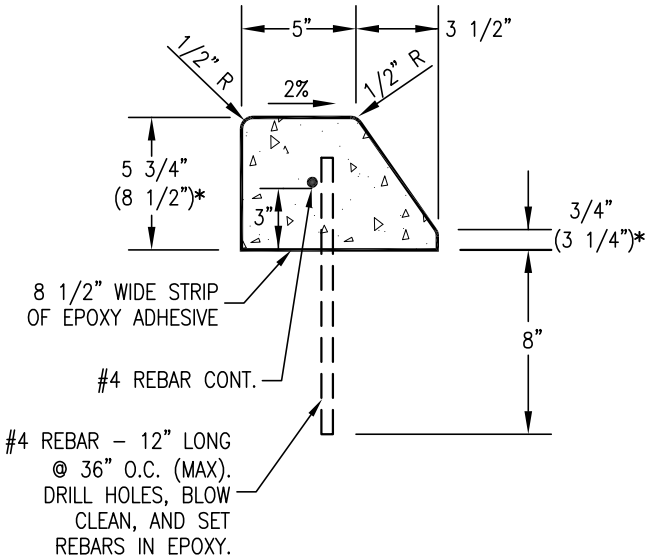

TYPE B–6 & B–8 CURBS

NO SCALE

NOTE: *DIMENSIONS SHOWN IN PARENTHESES ABOVE ARE FOR TYPE B–8 CURB ONLY.

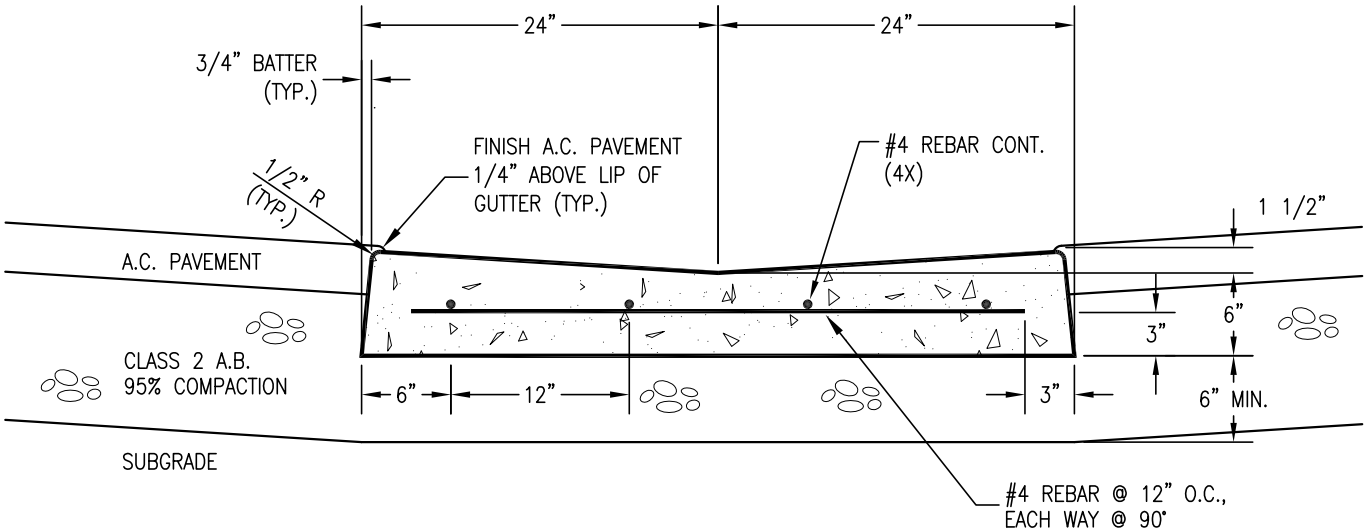

VALLEY GUTTER

NO SCALE

NOTES:

1. CONCRETE VALLEY GUTTER SHALL BE INSTALLED PRIOR TO PAVING.
2. INSTALL WEAKENED PLANE JOINTS AT 10' INTERVALS (MAX).
3. 18" WIDE BANDS OF PAVEMENT ON EACH SIDE OF NEW VALLEY GUTTER SHALL BE REMOVED AND REPLACED. SEE NOTE 5 OF GENERAL NOTES (APPENDIX) FOR REQUIREMENTS.

DRAWN BY: K. TRAN	CONCRETE MEDIAN CURBS AND VALLEY GUTTER	ST-13
CHECKED BY: F. AMIN		
APPROVED BY: G. GOMEZ		
DATE: OCTOBER 2013	CITY OF SANTA CLARA	PAGE: 13

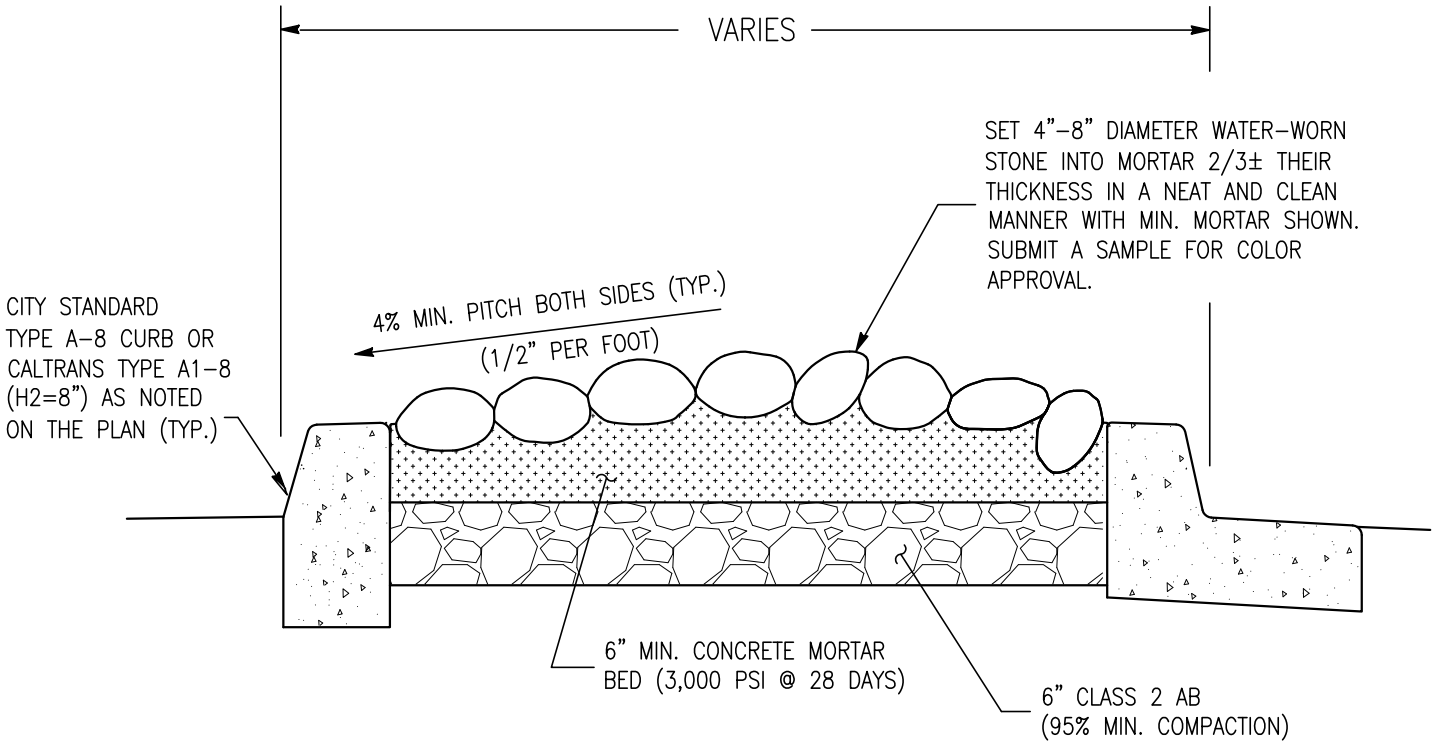

NOTES:

1. AFTER THE COBBLESTONE HAS BEEN SET INTO THE MORTAR, THE EXCESSIVE MORTAR IN BETWEEN THE JOINTS OF THE COBBLESTONES SHALL BE CAREFULLY REMOVED AND RAKED IN A SMOOTH JOINT (NO PROTRUSION OF MORTAR WILL BE ALLOWED).
2. CLEAN MORTAR FROM VISIBLE PORTIONS OF COBBLESTONES AFTER INSTALLATION.

DRAWN BY: K. TRAN	MEDIAN COBBLESTONE INSTALLATION	ST-13A
CHECKED BY: F. AMIN		
APPROVED BY: F. AMIN		
DATE: JANUARY 2016	CITY OF SANTA CLARA	PAGE: 13A

S.C.J. = SIDEWALK CONTACT JOINT
W.P.J. = WEAKENED PLANE JOINT

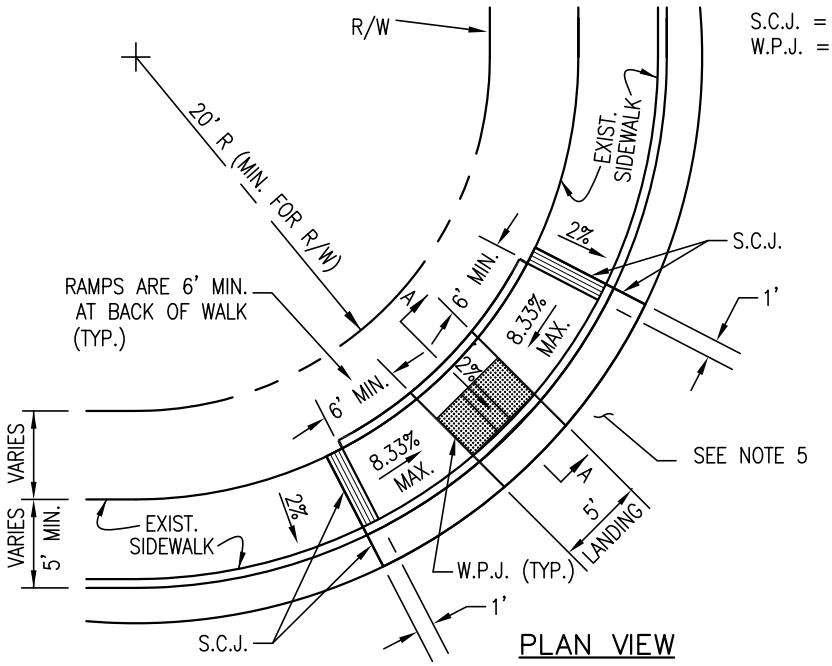

PLAN VIEW
NO SCALE

NOTES:

1. CURB RAMPS SHALL HAVE DETECTABLE WARNING SURFACES (GROOVING AND TRUNCATED DOMES). SEE DETAIL ST-16 FOR GROOVING DETAILS AND TRUNCATED DOME DETAILS.
2. AT THE DISCRETION OF CITY ENGINEER, TWO CURB RAMPS SHALL BE REQUIRED WHERE THERE ARE TWO CROSS WALKS AT A CORNER.
3. CURB RAMPS FOR SEPARATED SIDEWALKS SHALL BE DESIGNED ON AN INDIVIDUAL BASIS.
4. THE SURFACE OF RAMP SHALL HAVE A TRANSVERSE BROOMED SURFACE TEXTURE ROUGHER THAN THE SURROUNDING SIDEWALK.
5. 18" WIDE BAND OF PAVEMENT SHALL BE REMOVED AND REPLACED. SEE NOTE 5 OF GENERAL NOTES (APPENDIX) FOR REQUIREMENTS.
6. SEE DESIGN CRITERIA FOR MINIMUM RIGHT-OF-WAY RADII.

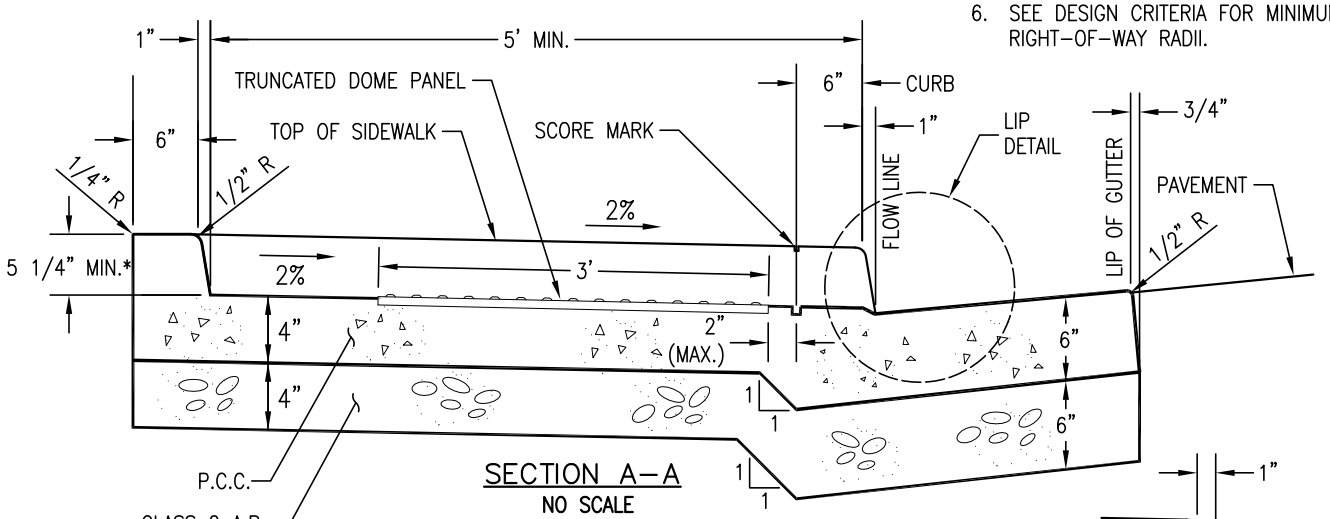

SECTION A-A
NO SCALE

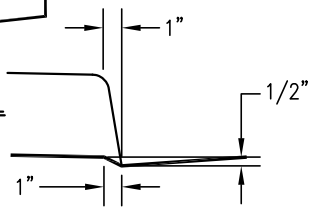

LIP DETAIL
NO SCALE

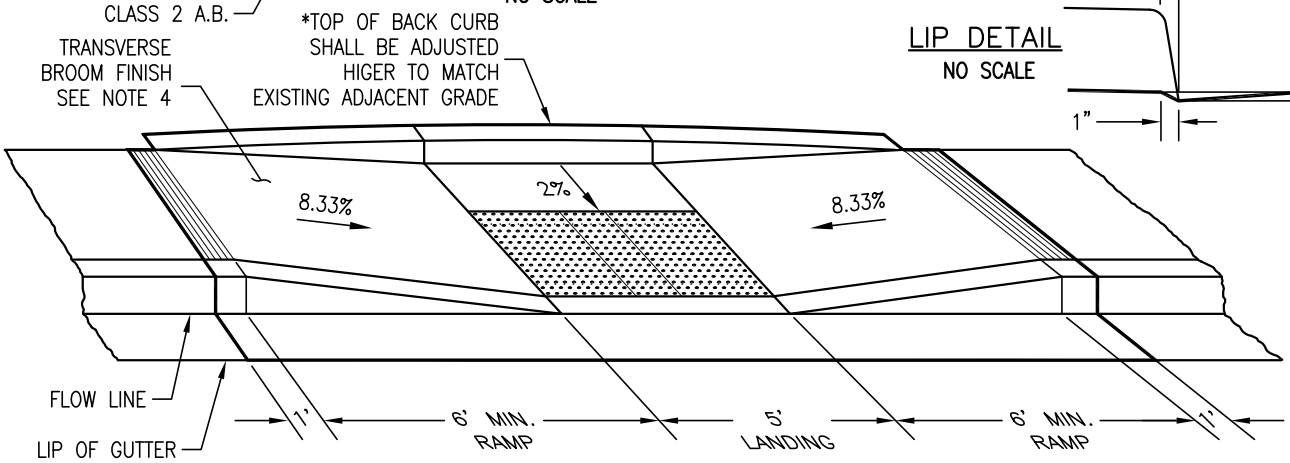

ELEVATION VIEW
NO SCALE

DRAWN BY: K. TRAN	CURVED CURB RAMP	ST-14
CHECKED BY: F. AMIN		
APPROVED BY: G. GOMEZ		
DATE: OCTOBER 2013	CITY OF SANTA CLARA	PAGE: 14

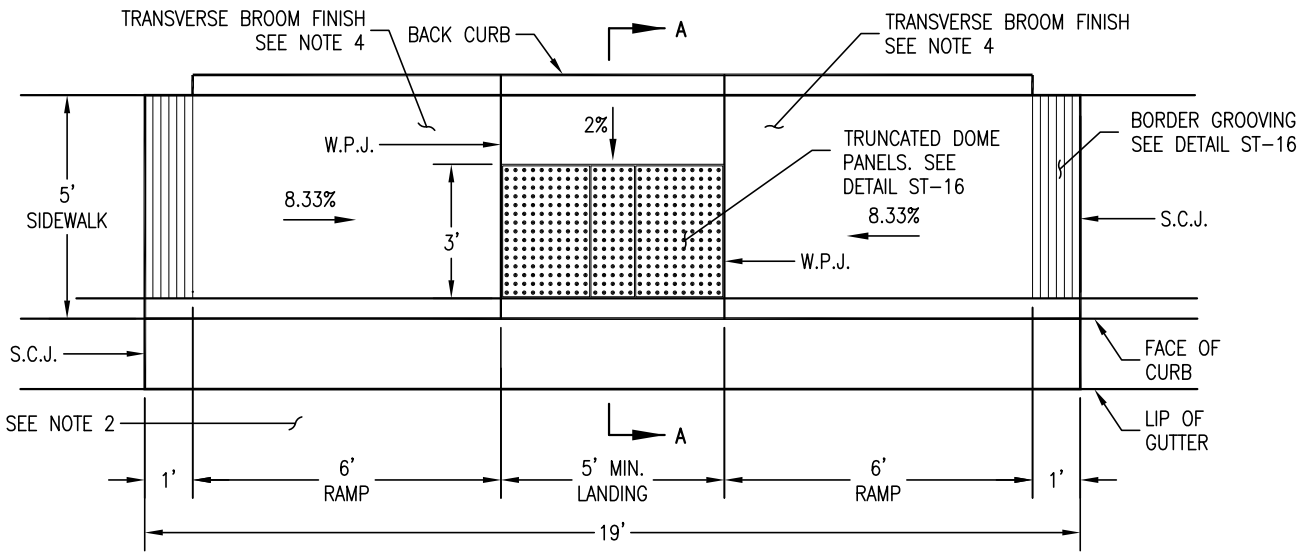

PLAN VIEW
NO SCALE

S.C.J. = SIDEWALK CONTACT JOINT
W.P.J. = WEAKENED PLANE JOINT

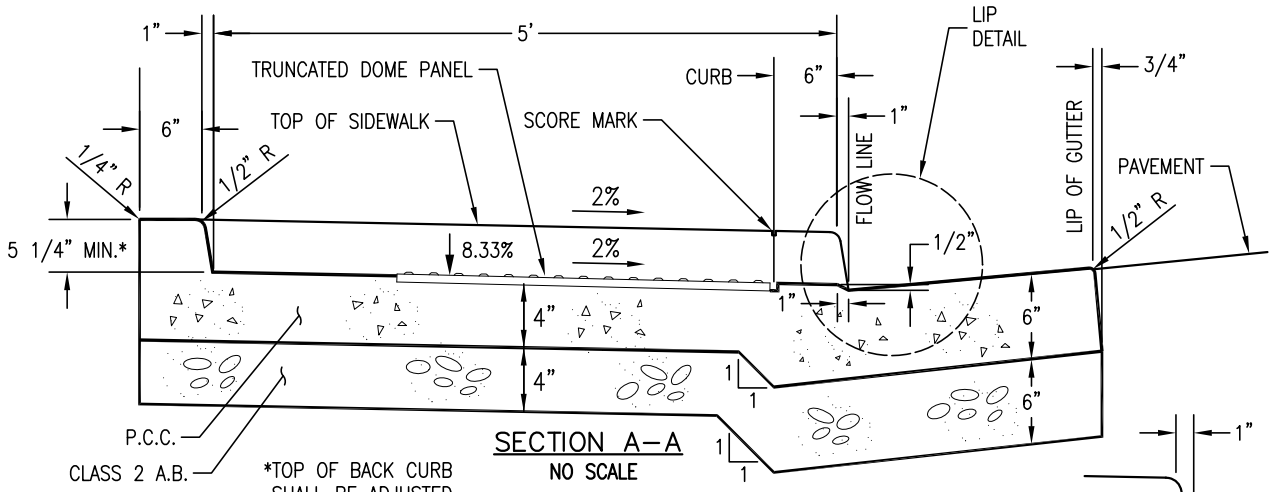

SECTION A–A
NO SCALE

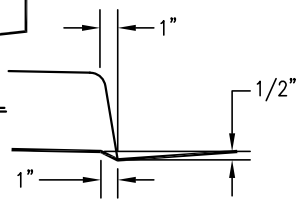

LIP DETAIL
NO SCALE

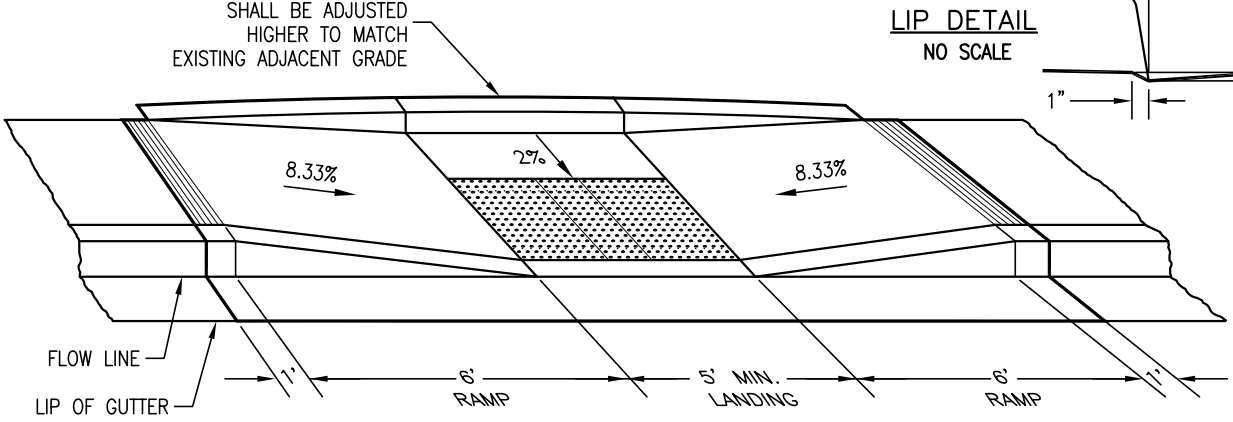

ELEVATION VIEW
NO SCALE

NOTES:

1. CURB RAMPS SHALL HAVE DETECTABLE WARNING SURFACES (GROOVING AND TRUNCATED DOMES). SEE DETAIL ST–16 FOR GROOVING DETAILS AND TRUNCATED DOME DETAILS.
2. 18" WIDE BAND OF PAVEMENT SHALL BE REMOVED AND REPLACED. SEE NOTE 5 OF GENERAL NOTES (APPENDIX) FOR REQUIREMENTS.
3. CURB RAMPS FOR SEPARATED SIDEWALKS SHALL BE DESIGNED ON AN INDIVIDUAL BASIS.
4. THE SURFACE OF RAMP SHALL HAVE A TRANSVERSE BROOMED SURFACE TEXTURE ROUGHER THAN THE SURROUNDING SIDEWALK.

DRAWN BY: K. TRAN	STRAIGHT CURB RAMP	ST-15
CHECKED BY: F. AMIN		
APPROVED BY: G. GOMEZ		
DATE: OCTOBER 2013	CITY OF SANTA CLARA	PAGE: 15

NOTES:

1. THE CURB RAMP SHALL HAVE A 12" WIDE BORDER WITH 1/4" GROOVES APPROXIMATELY 1" O.C. SEE BORDER GROOVING DETAIL.

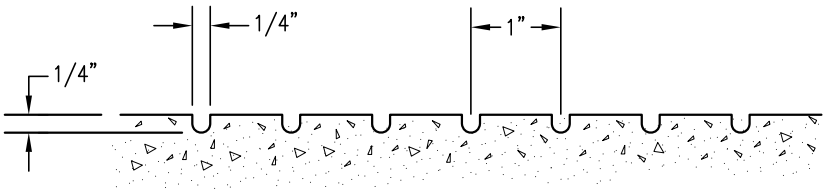

BORDER GROOVING DETAIL

NOTES:

1. THE DETECTABLE WARNING SURFACE SHALL CONSIST OF RAISED TRUNCATED DOMES EXTENDING THE FULL WIDTH OF AND 3'-0" DEPTH OF THE CURB RAMP LANDING.
2. THE RAISED TRUNCATED DOME PANELS SHALL BE CENTERED AND SQUARED ON THE CURB RAMP.
3. THE RAISED TRUNCATED DOME PANELS SHALL BE CONCRETE, CASTinTACT™ MANUFACTURED BY MASCO, TELEPHONE NO. 1-530-878-2440, OR APPROVED EQUAL.
4. THE COLOR OF THE RAISED TRUNCATED DOMES SHALL BE "SAFETY YELLOW".
5. THE EDGE OF THE RAISED TRUNCATED DOME PANEL NEAREST THE STREET SHALL BE BETWEEN 6" AND 8" FROM THE GUTTER FLOWLINE.
6. ALL TRUNCATED DOME DIMENSIONS HEREIN ARE NOMINAL.

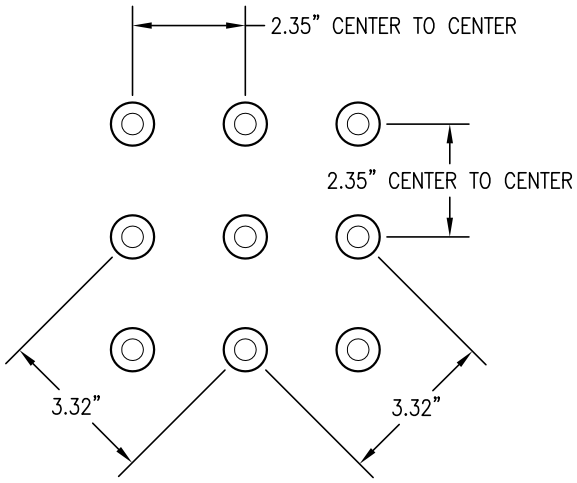

RAISED TRUNCATED DOME PATTERN (IN-LINE)

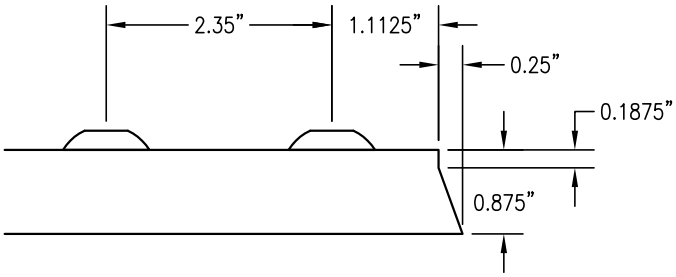

TRUNCATED DOME PANEL WEDGE DETAIL

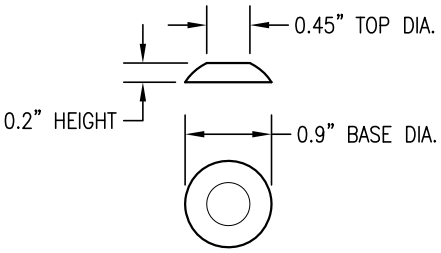

RAISED TRUNCATED DOME

DRAWN BY: K. TRAN	CURB RAMP GROOVING AND TRUNCATED DOME DETAILS	ST-16
CHECKED BY: F. AMIN		
APPROVED BY: G. GOMEZ		
DATE: OCTOBER 2013	CITY OF SANTA CLARA	PAGE: 16

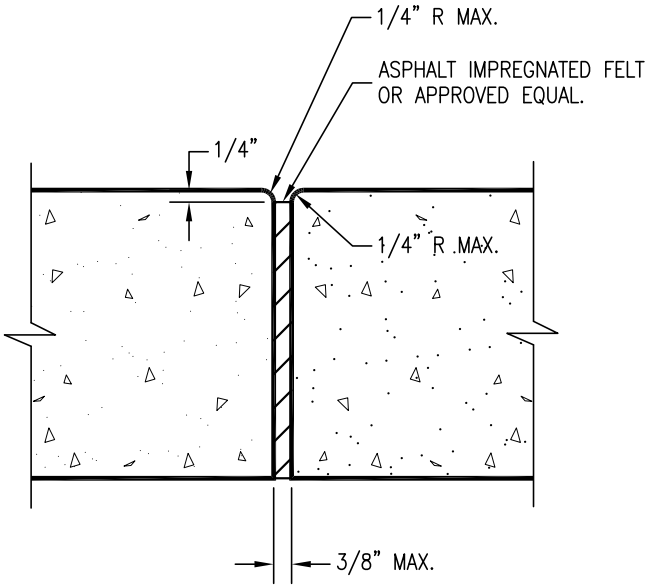

EXPANSION JOINT

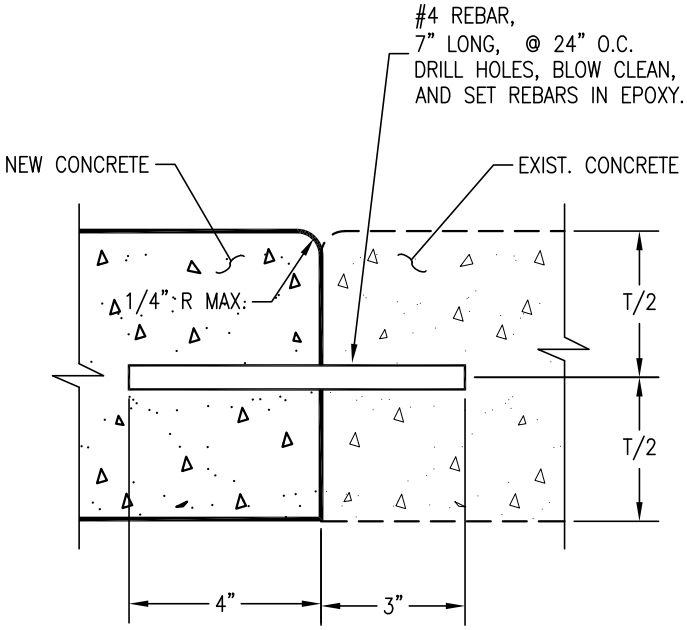

SIDEWALK CONTACT JOINT
"COLD JOINT"

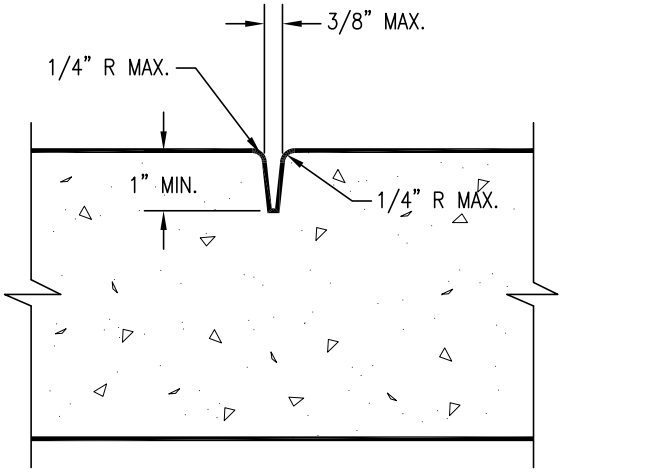

WEAKENED PLANE JOINT
"DEEP JOINT"

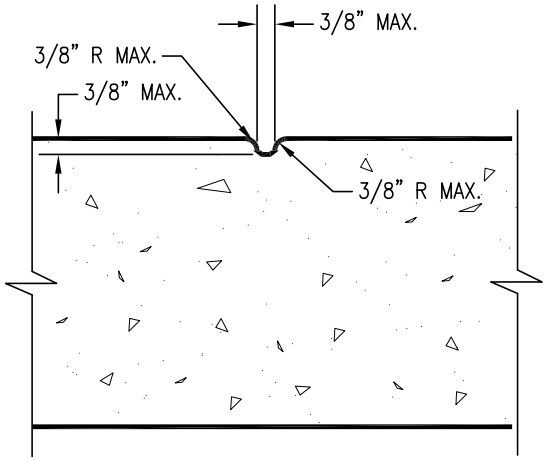

SCORE MARK
"DUMMY JOINT"

DRAWN BY: K. TRAN	CONCRETE JOINTS	ST-17
CHECKED BY: F. AMIN		
APPROVED BY: G. GOMEZ		
DATE: OCTOBER 2013	CITY OF SANTA CLARA	PAGE: 17

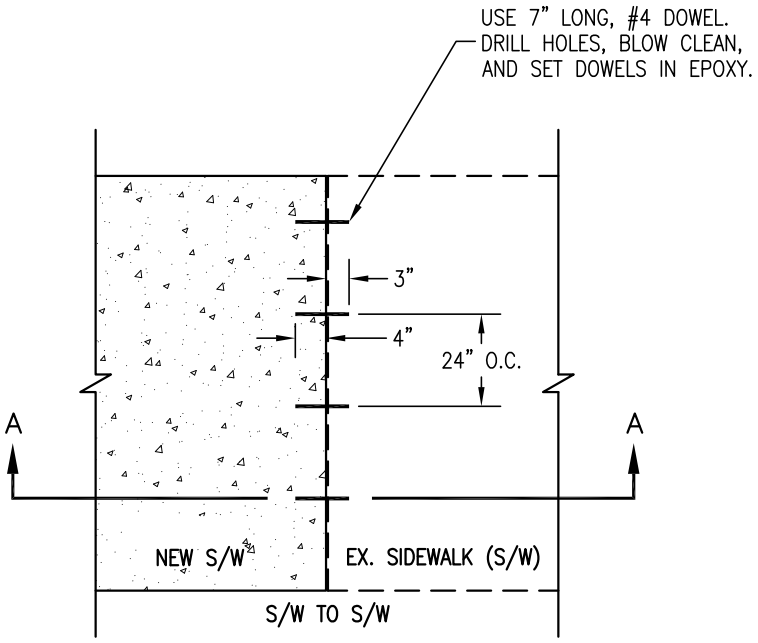

PLAN VIEW
NO SCALE

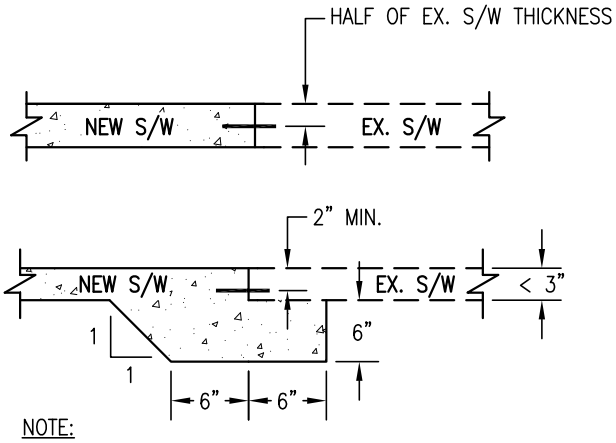

NOTE:

IF EXISTING SIDEWALK IS LESS THAN 3" THICK, USE 6" DEEP X 12" WIDE P.C.C. KEY WITH DOWEL CONNECTION.

SECTION A–A
NO SCALE

SIDEWALK

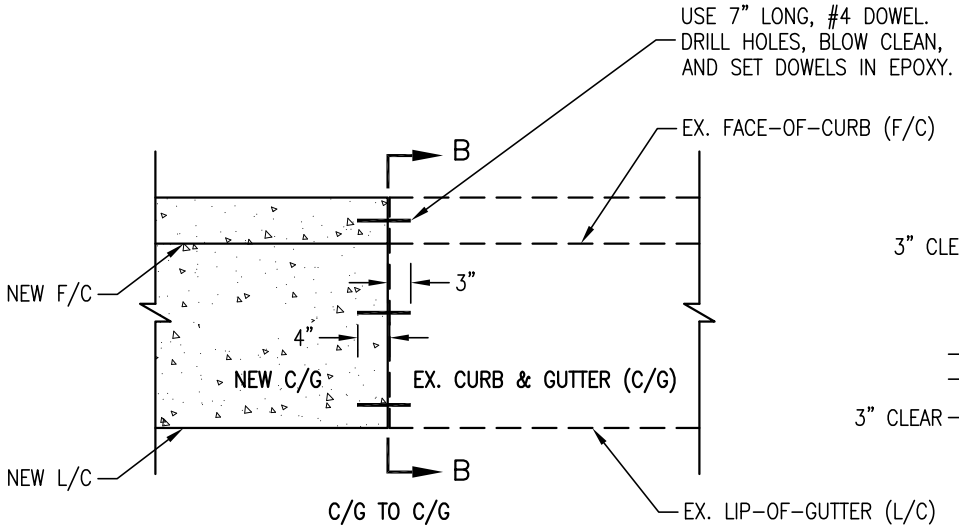

PLAN VIEW
NO SCALE

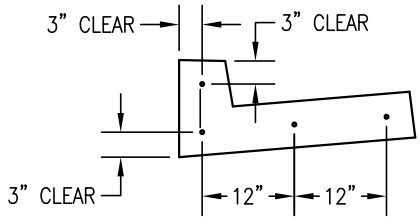

SECTION B–B
NO SCALE

CURB & GUTTER

DRAWN BY: K. TRAN	DOWEL CONNECTIONS	ST-18
CHECKED BY: F. AMIN		
APPROVED BY: G. GOMEZ		
DATE: OCTOBER 2013	CITY OF SANTA CLARA	PAGE: 18

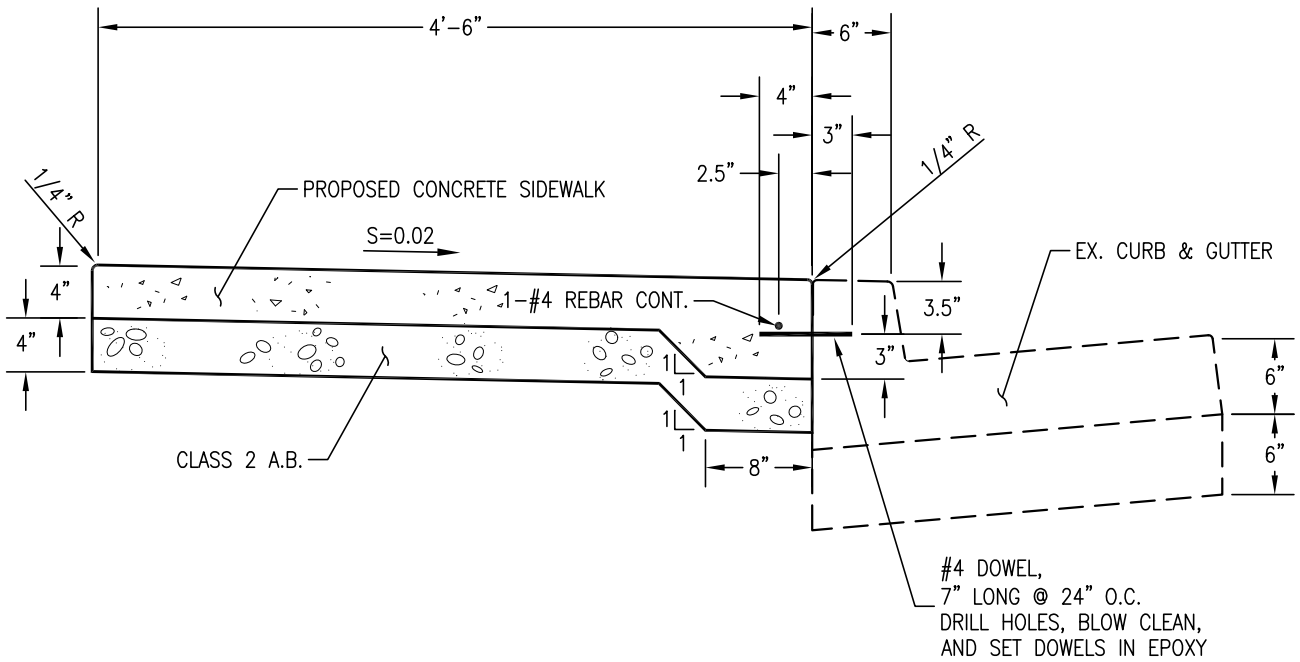

NOTES:

1. WHERE A NEW DRIVEWAY OCCURS, REPLACE EXISTING CURB AND GUTTER BETWEEN THE NEAREST JOINTS AND POUR CURB AND DRIVEWAY MONOLITHICALLY.

2. IF THE REAR FACE OF THE DRIVEWAY CURB DEPRESSION IS NOT AT LEAST 6 INCHES IN DEPTH, REMOVE AND REPLACE THE CURB DEPRESSION WITH A STANDARD MONOLITHIC DRIVEWAY.

3. WHERE IT BECOMES NECESSARY FOR ANY REASON TO REPLACE CURB AND/OR GUTTER, REPLACEMENT MUST BE MONOLITHIC.

4. IF TOP OF EXISTING CURB DOES NOT DRAIN TOWARDS THE STREET, REMOVE CURB AND GUTTER AND REPLACE WITH MONOLITHIC CURB, GUTTER, AND SIDEWALK.

DRAWN BY: K. TRAN	SIDEWALK TO CURB CONNECTION	ST-19
CHECKED BY: F. AMIN		
APPROVED BY: G. GOMEZ		
DATE: OCTOBER 2013	CITY OF SANTA CLARA	PAGE: 19

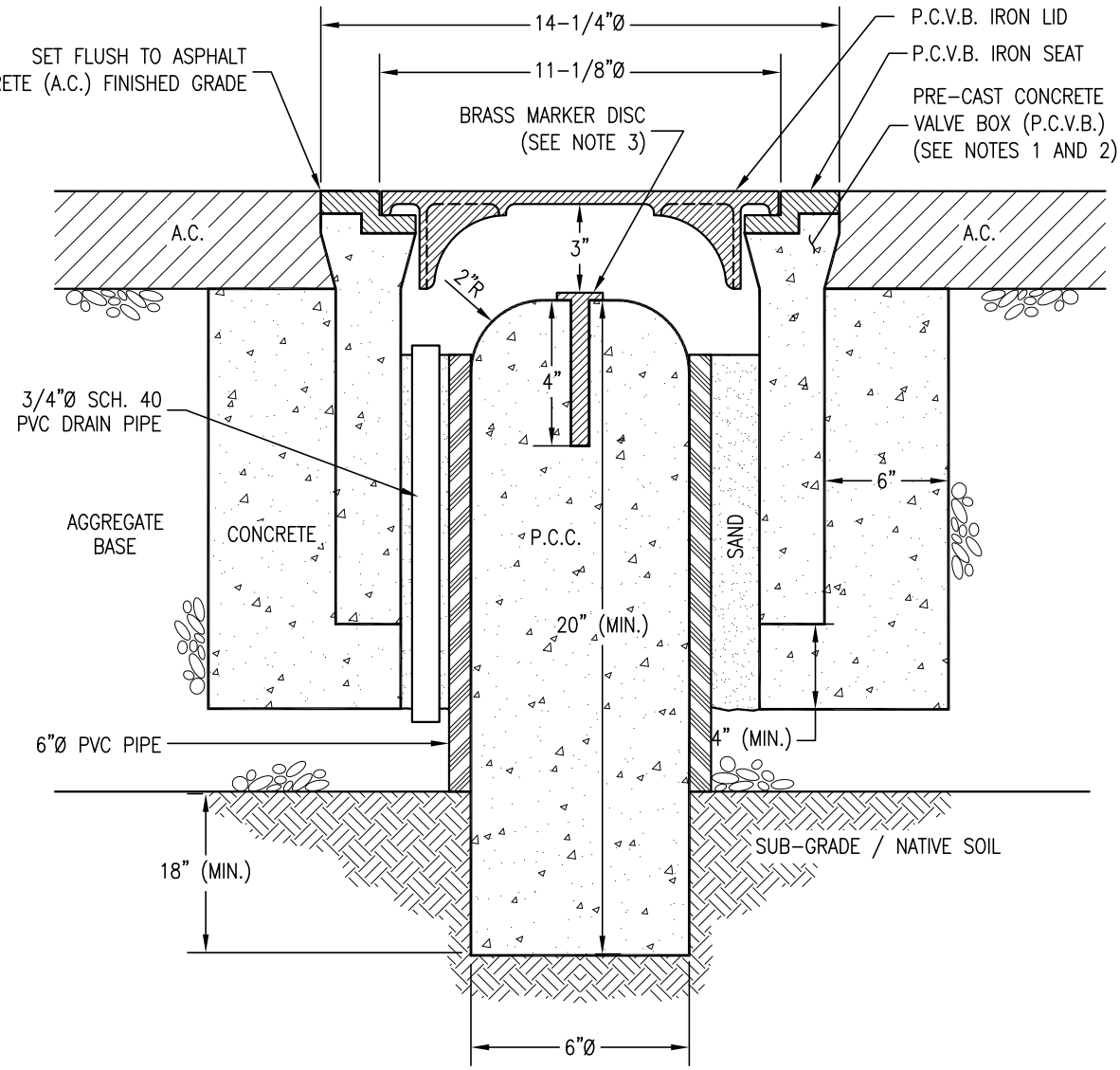

NOTES:

1. PRE-CAST BOX, SEAT, AND LID SHALL BE CHRISTY CONCRETE PRODUCT MODEL G5 TRAFFIC VALVE BOX OR APPROVED EQUAL.

2. SURFACE OF LID SHALL BE LABELED "MONUMENT" ENGRAVED IN 1" HIGH LETTERS.

3. BRASS MARKER DISC SHALL BE ENGRAVED WITH RESPONSIBLE LICENSED SURVEYOR OR CIVIL ENGINEER REGISTRATION NO. AND MONUMENT POINT PUNCHED.

4. CONCRETE SHALL BE CLASS "A".

5. PLACE CONCRETE FOR MONUMENT IN DRILLED HOLE.

6. LOCKING GRADE RINGS (NOT SHOWN) SHALL BE INSTALLED WITH 3/8"X1" NC BOLT AND JAM NUT (IN 3 PLACES) WHEN STREET IS RESURFACED TO BRING MONUMENT LID FLUSH WITH NEW FINISHED GRADE.

LOCKING GRADE RINGS	
CHRISTY NO.	DESCRIPTION
G5GR10	1" HIGH CAST IRON
G5GR15	1-1/2" HIGH CAST IRON
G5GR20	2" HIGH CAST IRON

DRAWN BY: K. TRAN	MONUMENT	ST-20
CHECKED BY: F. AMIN		
APPROVED BY: G. GOMEZ		
DATE: OCTOBER 2013	CITY OF SANTA CLARA	PAGE: 20

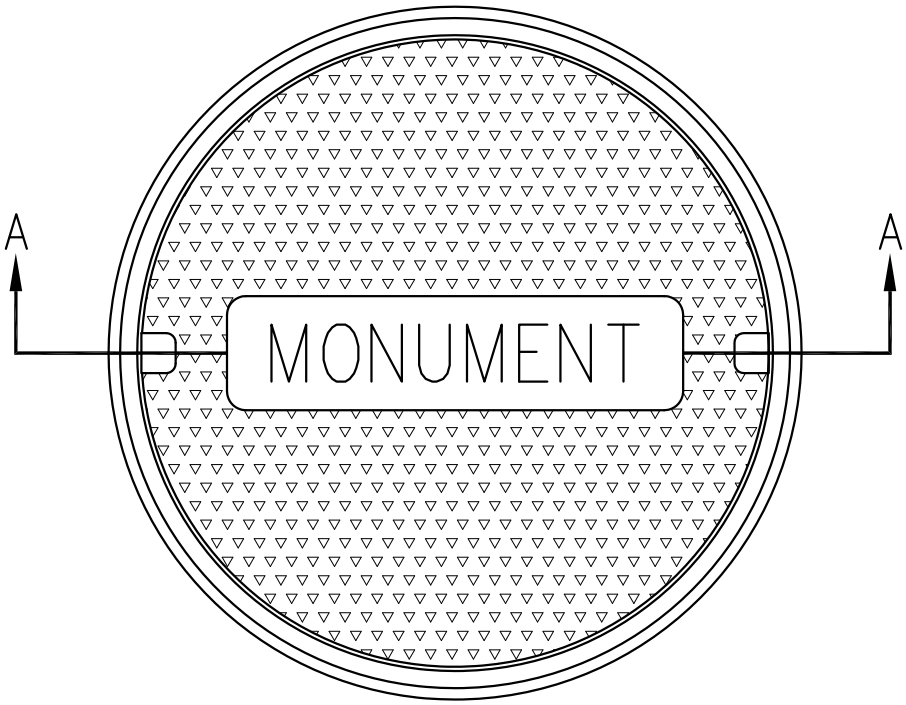

TOP VIEW
NO SCALE

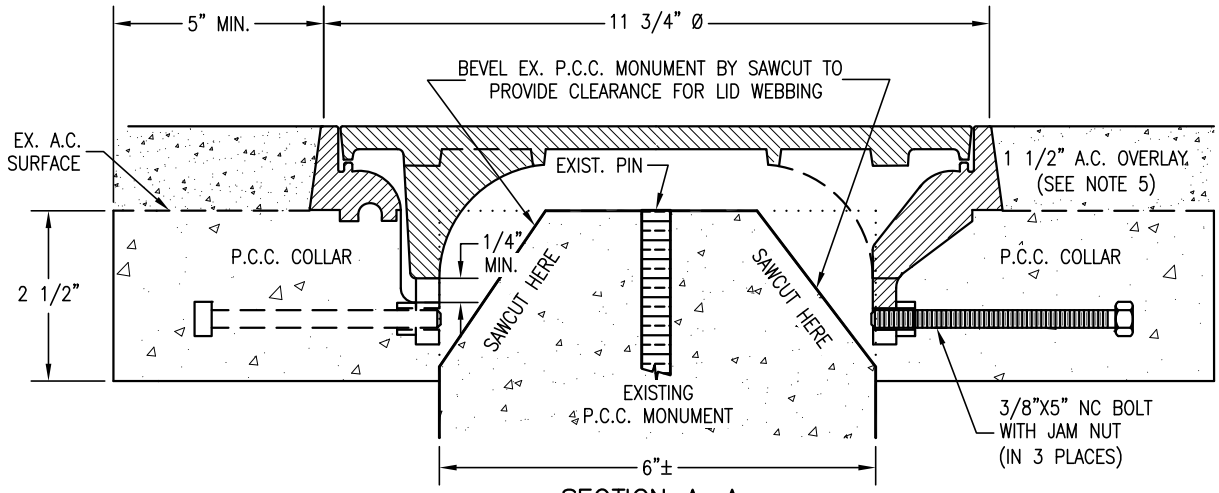

SECTION A–A
NO SCALE

NOTES:

1. WHERE AN EXISTING MONUMENT BOX CANNOT BE ADJUSTED TO GRADE WITH IRON EXTENSION RINGS, THE OLD BOX SHALL BE COMPLETELY REMOVED AND A NEW MONUMENT BOX INSTALLED. THIS ADJUSTMENT IS ALSO APPLICABLE TO MONUMENTS WHICH DO NOT HAVE MONUMENT BOXES.

2. MAINTAIN AT LEAST 1/4 INCH CLEARANCE BETWEEN LEGS OF THE NEW COVER AND THE CONCRETE COLLAR.

3. THE BEVELING OF THE EXISTING MONUMENT MUST BE SAW CUT. EXERCISE EXTREME CARE TO AVOID DAMAGE TO PIN.

4. ON STREETS WITH OVERLAY THICKNESS OF 2 1/2" OR 3", PROVIDE ADDITIONAL LOCKING GRADE RINGS COMBINED TO MATCH OVERLAY THICKNESS. ON STREETS WITH 2" OVERLAY, PROVIDE 2" GRADE RING. LOCKING GRADE RINGS AND COVER SHALL BE CHRISTY PRODUCTS FOR G5 TRAFFIC VALVE BOX OR APPROVED EQUAL (SEE DETAIL ST–20).

5. IF THE STABILITY OR LOCATION OF THE EXISTING MONUMENT IS AFFECTED BY THE SAWCUTTING, THE CONTRACTOR SHALL, AT HIS EXPENSE, FILE A CORNER RECORD WITH THE COUNTY SURVEYOR AND INSTALL A REPLACEMENT STANDARD MONUMENT.

DRAWN BY: K. TRAN	SPECIAL MONUMENT BOX ADJUSTMENT	ST-21
CHECKED BY: F. AMIN		
APPROVED BY: G. GOMEZ		
DATE: OCTOBER 2013	CITY OF SANTA CLARA	PAGE: 21

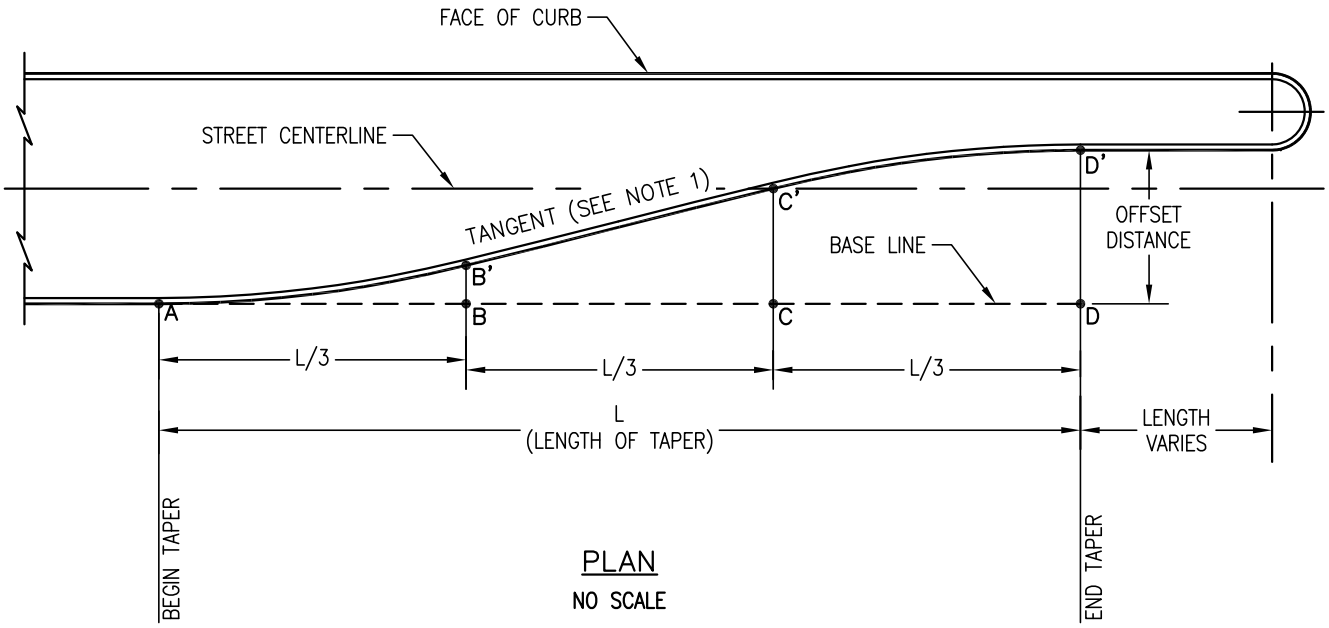

PLAN

NO SCALE

	LENGTH OF TAPER (FEET)			OFFSET DISTANCE (FEET)			
	L=60'	L=90'	L=120'	DD'=10'	DD'=11'	DD'=12'	
	DISTANCE FROM POINT "A"						
	0	0	0	0	0	0	
	5	7.5	10	0.16	0.17	0.19	
	10	15.0	20	0.62	0.69	0.75	
	15	22.5	30	1.41	1.55	1.69	
B'	20	30.0	40	2.50	2.75	3.00	B'
	30	45.0	60	5.00	5.50	6.00	
C'	40	60.0	80	7.50	8.25	9.00	C'
	45	67.5	90	8.59	9.45	10.31	
	50	75.0	100	9.38	10.31	11.25	
	55	82.5	110	9.84	10.83	11.81	
D'	60	90.0	120	10.00	11.00	12.00	D'

NOTES:

1. WHERE STREET CENTERLINE IS A CURVE, NEITHER BASE LINE NOR TAPER BETWEEN B & C WILL BE A TANGENT. USE PROPORTIONAL OFFSETS FROM B TO C.

2. L = AD = LENGTH OF TAPER
   AB = BC = CD = 1/3 L
   BB' = 1/3 CC' = 1/4 DD'
   AB' & C'D' ARE PARABOLIC CURVES

DRAWN BY: K. TRAN	MEDIAN ISLAND TAPER	ST-22
CHECKED BY: F. AMIN		
APPROVED BY: G. GOMEZ		
DATE: OCTOBER 2013	CITY OF SANTA CLARA	PAGE: 22

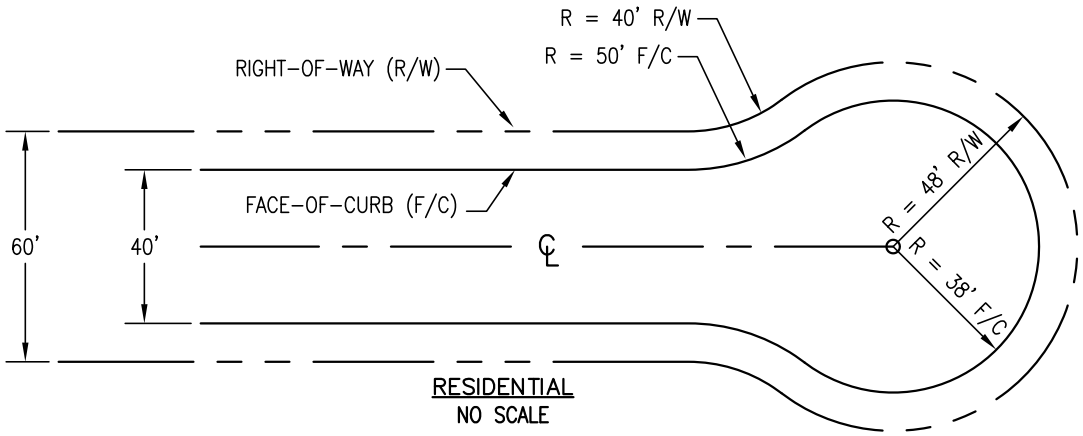

RESIDENTIAL
NO SCALE

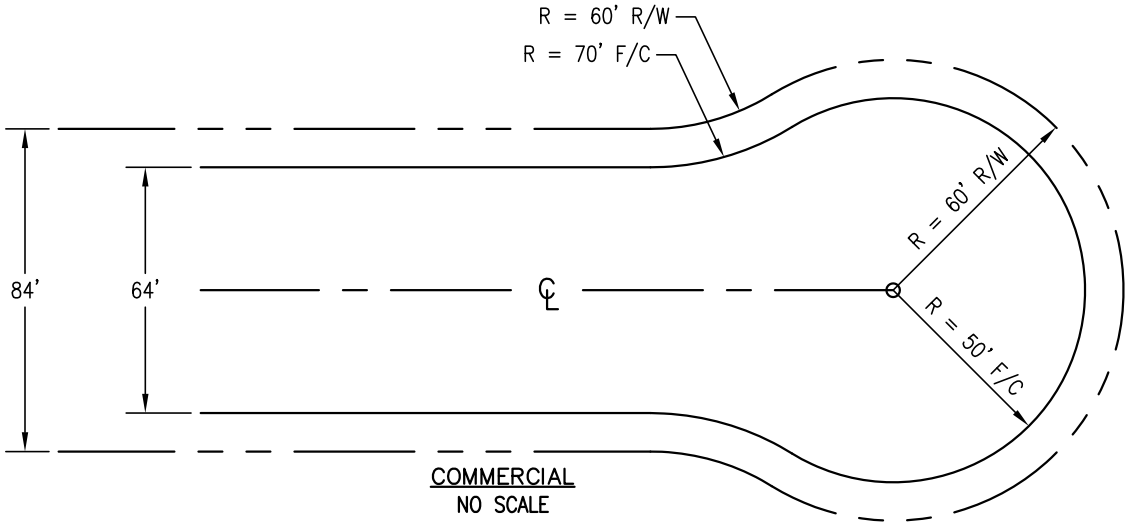

COMMERCIAL
NO SCALE

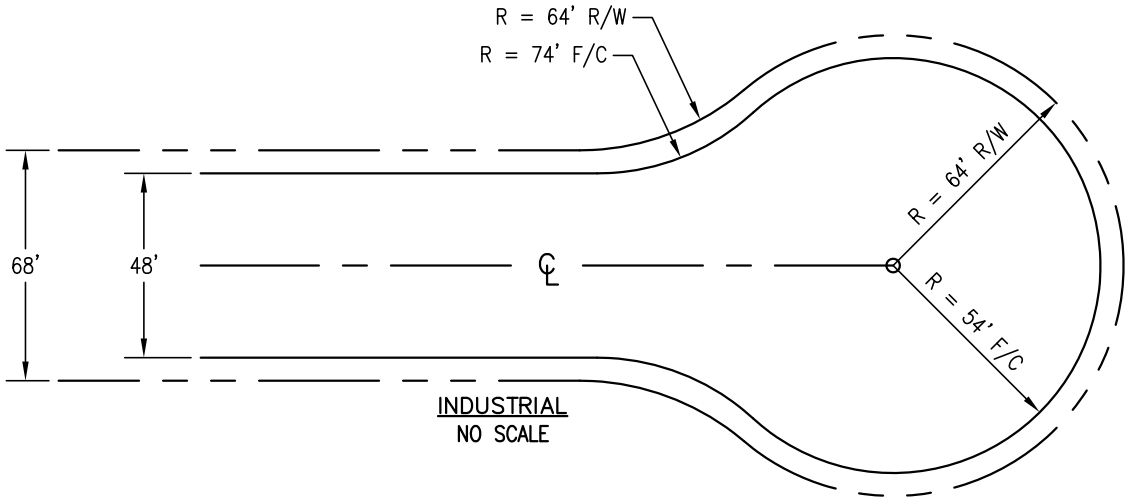

INDUSTRIAL
NO SCALE

NOTE: MINIMUM FRONTAGE ROAD WIDTH IS 36 FEET BETWEEN CURB FACES.

DRAWN BY: K. TRAN	CUL-DE-SAC	ST-23
CHECKED BY: F. AMIN		
APPROVED BY: G. GOMEZ		
DATE: OCTOBER 2013	CITY OF SANTA CLARA	PAGE: 23

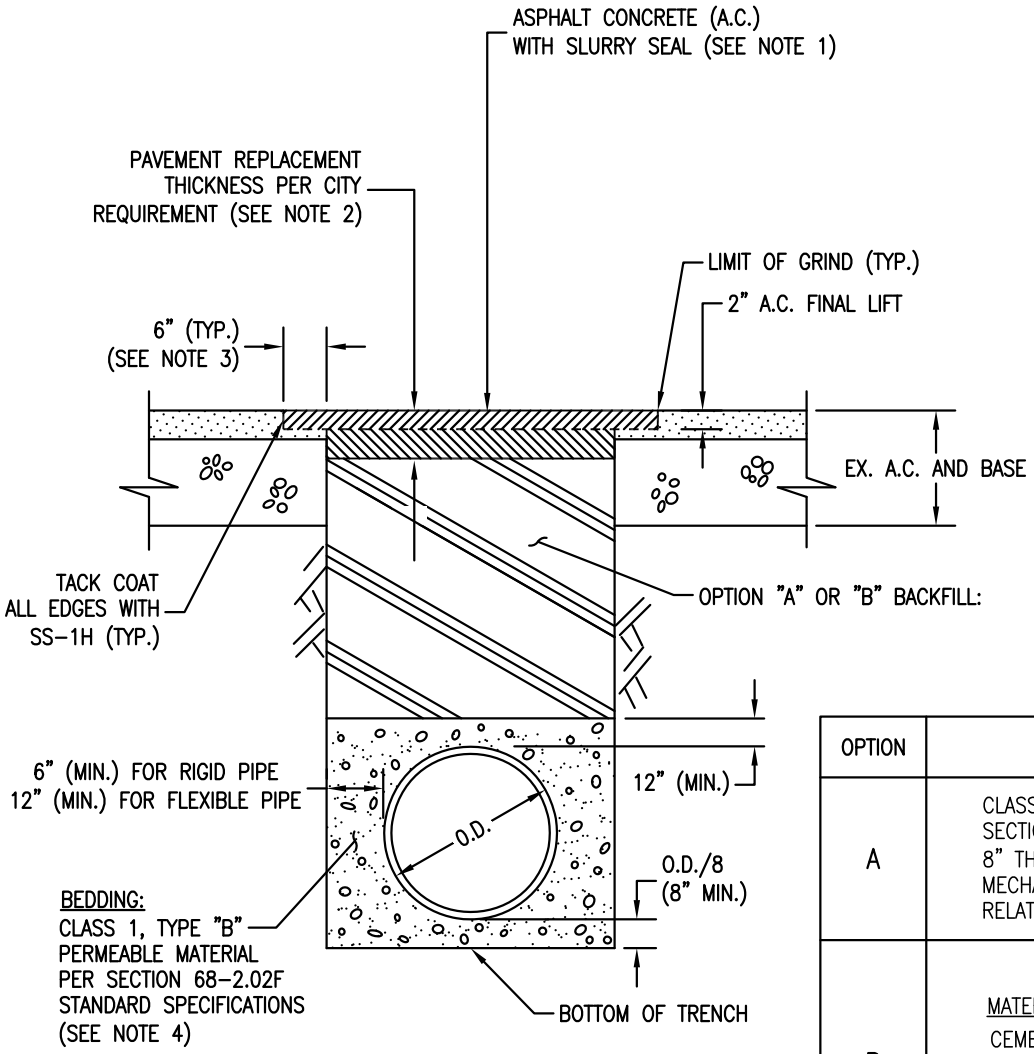

CROSS SECTION VIEW

NO SCALE

OPTION	DESCRIPTION
A	CLASS 2 AGGREGATE BASE (3/4") PER SECTION 26 OF CALTRANS SPECIFICATIONS. 8" THICK (MAX.) UNCOMPACTED LIFTS. MECHANICALLY COMPACT TO AT LEAST 95% RELATIVE COMPACTION.
B	CONTROLLED DENSITY FILL (CDF) MATERIAL — ABS. VOL. CEMENT — 0.15 FLYASH — 1.98 #8 AGGREGATE — 8.97 SAND — 8.27 WATER — 6.02 AIR — 1.61 27.00

NOTES:

1. SLURRY SEAL SHALL BE EXTENDED 12" BEYOND THE A.C. PAVEMENT REPLACEMENT LIMIT.
2. A.C. PAVEMENT REPLACEMENT SHALL BE FULL DEPTH A.C. WITH THICKNESS PER CITY REQUIREMENT. SEE DETAIL ST-26 FOR TRENCH PAVEMENT THICKNESS REQUIREMENTS OF A PARTICULAR STREET.
3. THE 6" BENCH SECTION FOR A.C. SHALL BE GROUND AND REMOVED IMMEDIATELY PRIOR TO FINISH PAVING OPERATIONS.
4. BEDDING MATERIAL SHALL CONSIST ENTIRELY OF CRUSHED, ANGULAR ROCK (NO ROUNDED PEA GRAVEL ALLOWED) FOR FLEXIBLE PIPE. FOR WATER MAINS AND LATERALS, BEDDING SHALL BE SAND. MATERIAL SHALL BE INSTALLED IN MAX. 8" LIFTS AND COMPACTED WITH VIBRATORY COMPACTOR.

DRAWN BY: K. TRAN	TRENCH BACKFILL AND PAVEMENT REPLACEMENT	ST-24
CHECKED BY: F. AMIN		
APPROVED BY: G. GOMEZ		
DATE: DECEMBER 2014	CITY OF SANTA CLARA	PAGE: 24

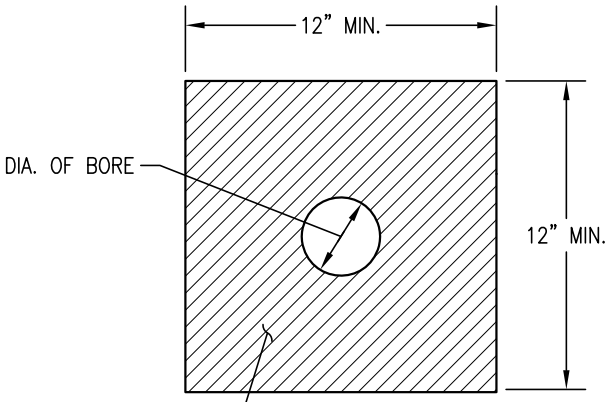

TOP VIEW
NO SCALE

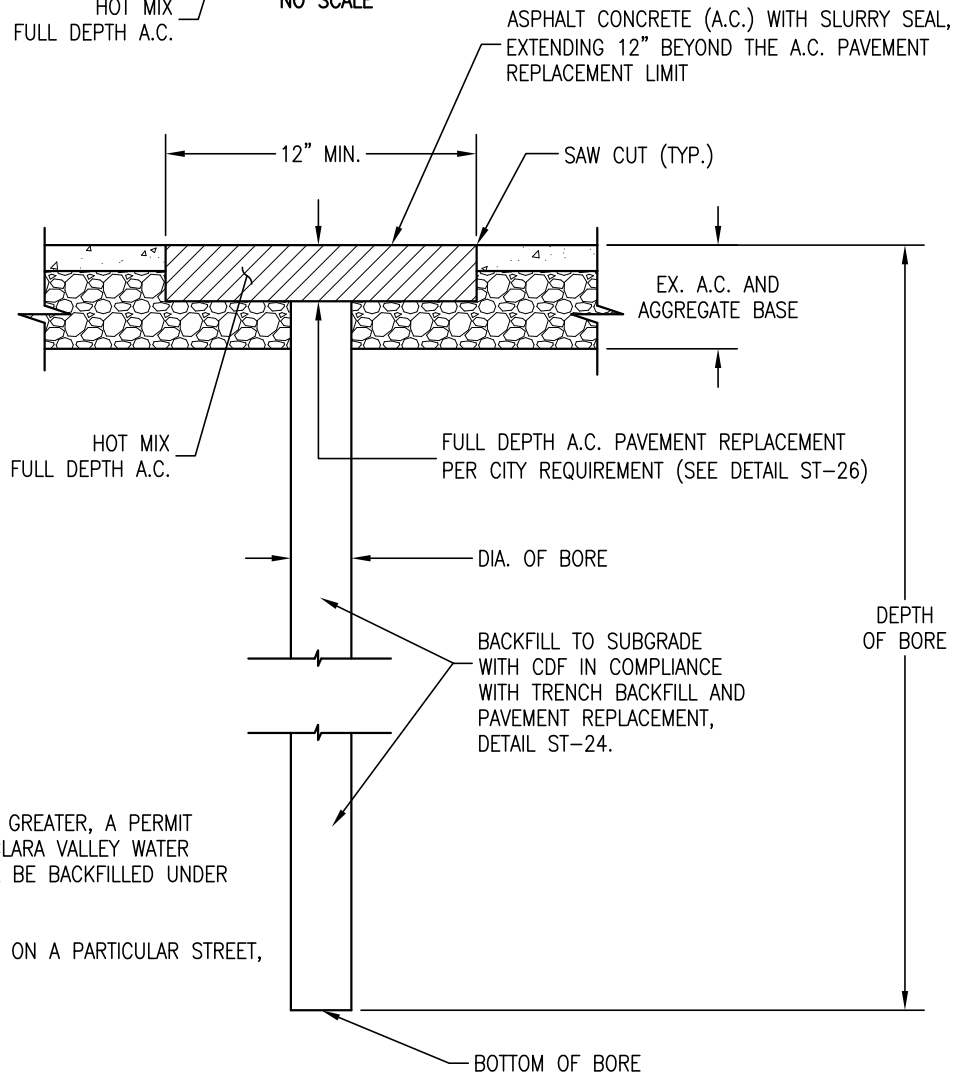

ELEVATION VIEW
NO SCALE

NOTES:

1. IF DEPTH OF BORE IS 45 FEET OR GREATER, A PERMIT SHALL BE OBTAINED FROM SANTA CLARA VALLEY WATER DISTRICT (SCVWD) AND BORE SHALL BE BACKFILLED UNDER SCVWD INSPECTION.

2. FOR THE REQUIRED A.C. THICKNESS ON A PARTICULAR STREET, SEE DETAIL ST-26.

DRAWN BY: K. TRAN	SOIL BORING BACKFILL AND PAVEMENT REPLACEMENT	ST-25
CHECKED BY: F. AMIN		
APPROVED BY: G. GOMEZ		
DATE: OCTOBER 2013	CITY OF SANTA CLARA	PAGE: 25

STREETS REQUIRING 10 INCHES OF ASPHALT CONCRETE FOR PAVEMENT RESTORATION

Agnew Road
Bassett Street
Benton Street (Lincoln to West City Limits)
Betsy Ross Drive
Bowers Avenue
Bunker Hill Lane
Calle de Luna
Calle del Mundo
Calle del Sol
De La Cruz Boulevard
Democracy Way
Freedom Circle
Great America Parkway
Great America Way (See note 1)
Homestead Road
Hope Drive
Juliette Lane
Kiely Boulevard
Kifer Road
Lafayette Street
Laurelwood Road
Lick Mill Boulevard
Martin Avenue
Mission College Boulevard
Monroe Street
Norman Avenue
Old Ironsides Drive
Old Mountain View-Alviso Road
Patrick Henry Drive
Pruneridge Avenue
Russell Avenue
Saratoga Avenue
Scott Boulevard
Stevens Creek Boulevard
Tasman Drive
Thomas Road
Walsh Avenue
Washington Street (South of Poplar)
Winchester Boulevard

NOTES: 1. Due to the presence of potentially hazardous materials in the ground under this road, special permission must be obtained prior to any work.

2. All streets, other than the streets listed above, require 8 inches of asphalt concrete for pavement restoration.

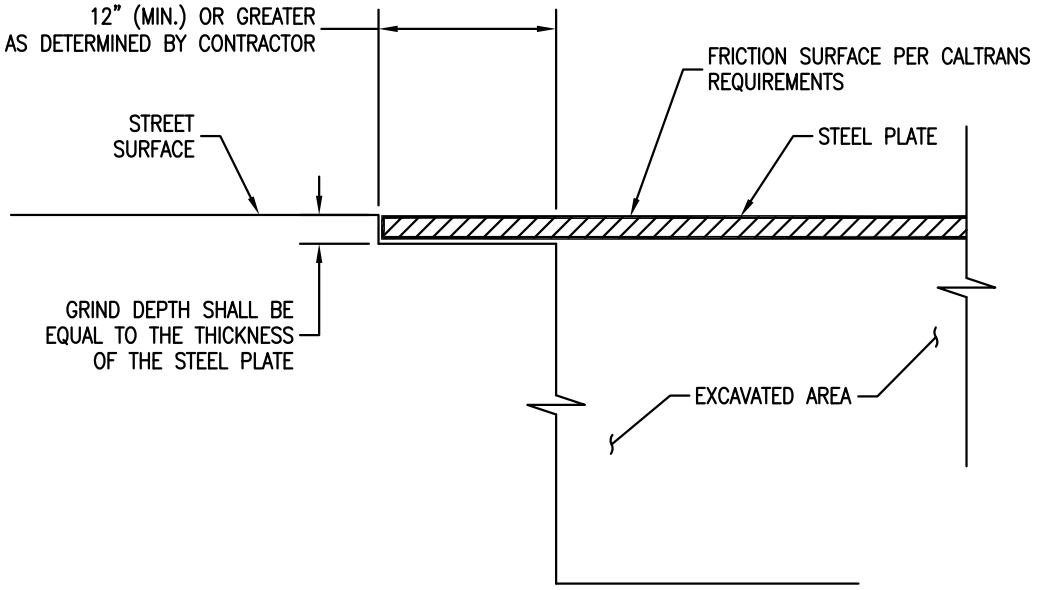

CROSS SECTION VIEW

NO SCALE

NOTES:

1. THE PLATE BENCHING DETAIL (SHOWN ABOVE) SHALL BE USED ON STREETS WITH A POSTED SPEED LIMIT OF 35 MPH OR HIGHER.
2. NAILS, COLD PATCH ASPHALT, ETC., MAY BE USED TO HOLD THE STEEL PLATE IN PLACE, SUBJECT TO THE APPROVAL OF THE CITY ENGINEER OR DESIGNEE.
3. IF THE GAP BETWEEN THE STREET SURFACE AND THE STEEL PLATE EXCEEDS 1 INCH, THE GAP SHALL BE FILLED WITH COLD PATCH ASPHALT.
4. THE EXCAVATION AREA SHALL BE BACKFILLED, AND THE PAVEMENT SHALL BE RESTORED WITHIN 5 WORKING DAYS OF THE COMPLETION OF THE PERMITTED WORK.

DRAWN BY: K. TRAN	STEEL PLATE BENCHING	ST-27
CHECKED BY: F. AMIN		
APPROVED BY: G. GOMEZ		
DATE: OCTOBER 2013	CITY OF SANTA CLARA	PAGE: 27

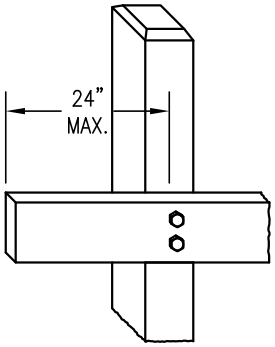

GUARD RAIL OVERHANG DETAIL
NO SCALE

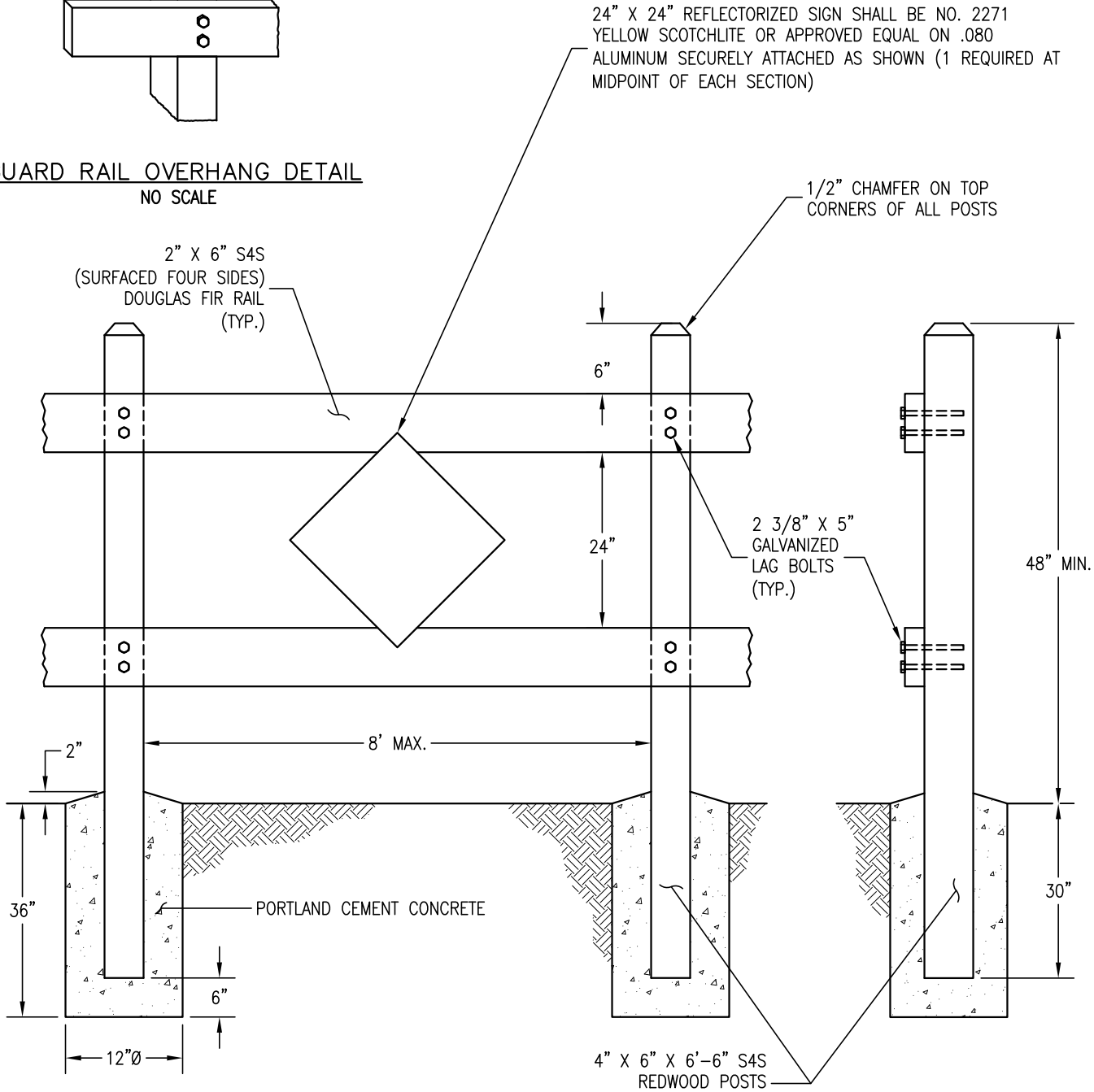

FRONT VIEW
NO SCALE

RIGHT VIEW
NO SCALE

NOTES:

1. GUARD RAILS AND POSTS SHALL BE PAINTED WITH TWO (2) COATS OF EXTERIOR WHITE WOOD PAINT.
2. BARRICADE SHALL EXTEND 2' BEYOND FACE OF CURB.

DRAWN BY: K. TRAN	STREET BARRICADE	ST-28
CHECKED BY: F. AMIN		
APPROVED BY: G. GOMEZ		
DATE: OCTOBER 2013	CITY OF SANTA CLARA	PAGE: 28

Department of Public Works
City of Santa Clara, CA

STANDARD DETAILS

STORM DRAIN SECTION

DETAILS SD-1 TO SD-8

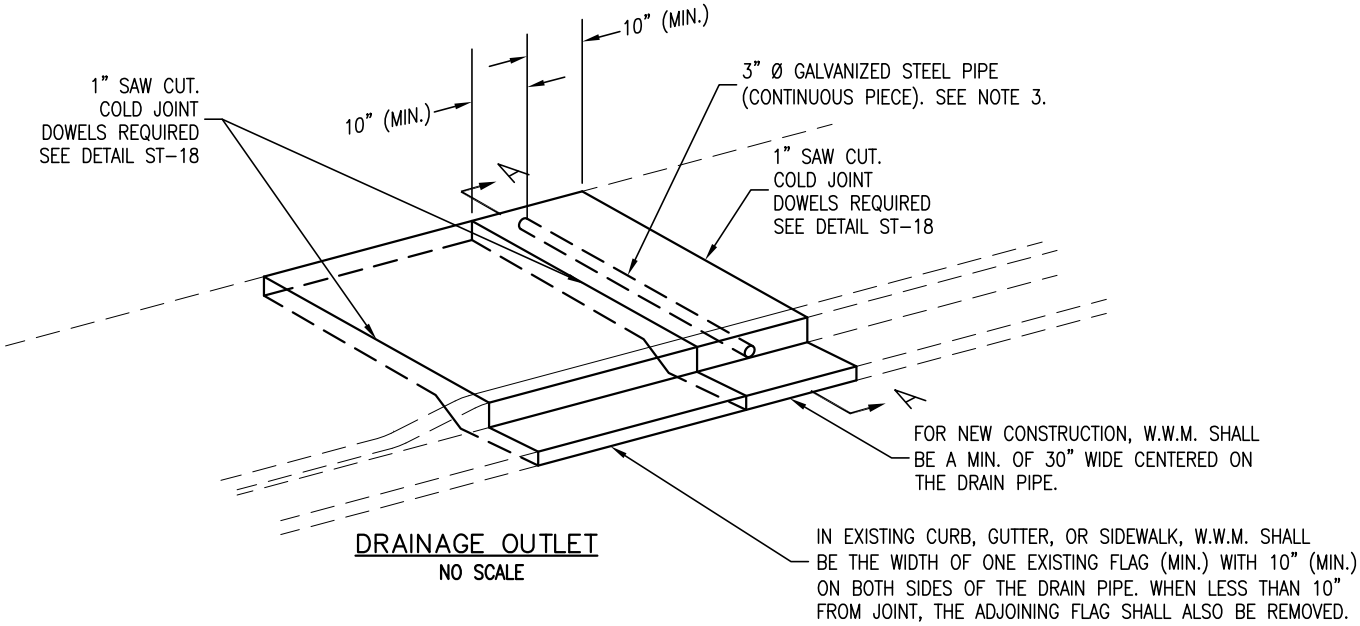

DRAINAGE OUTLET
NO SCALE

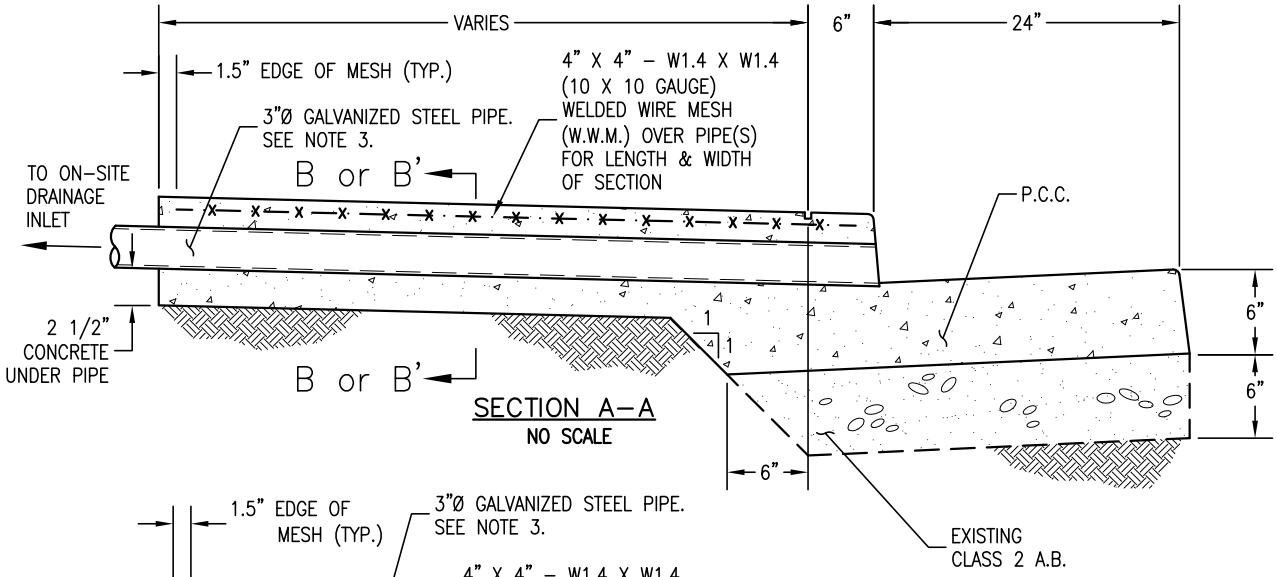

SECTION A–A
NO SCALE

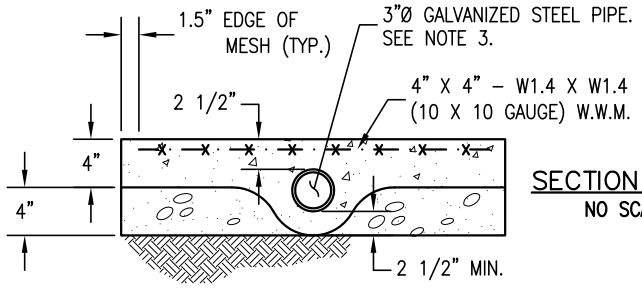

SECTION B–B
NO SCALE

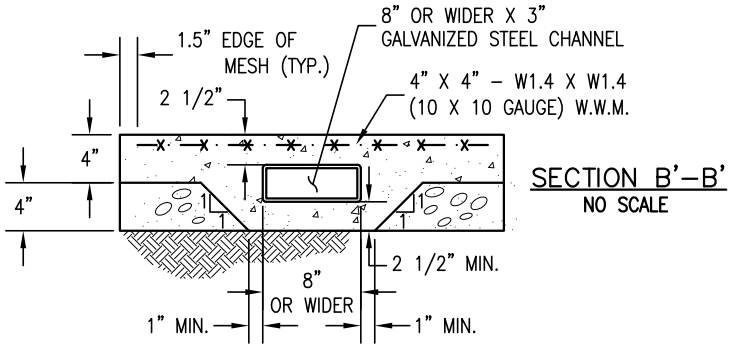

SECTION B'–B'
NO SCALE

NOTES:

1. STEEL PIPE OR CHANNEL SHALL BE ONE CONTINUOUS LENGTH FROM PROPERTY LINE TO CURB FACE.
2. WHERE TWO PIPES ARE ALLOWED, PIPE SPACING SHALL MAINTAIN A MINIMUM CLEAR DISTANCE OF TWO (2) INCHES.
3. WHERE THREE OR MORE PIPES ARE REQUIRED, A RECTANGULAR 8" OR WIDER X 3" GALVANIZED STEEL CHANNEL SHALL BE USED, AND SHALL MAINTAIN THE MINIMUM CLEAR DISTANCES. SEE SECTION B'–B'.
4. CURB FACE DRAIN OUTLET MAY BE USED ONLY AT LOCATIONS APPROVED BY THE CITY ENGINEER.

DRAWN BY: K. TRAN	CURB FACE DRAINAGE OUTLET	SD-1
CHECKED BY: F. AMIN		
APPROVED BY: G. GOMEZ		
DATE: OCTOBER 2013	CITY OF SANTA CLARA	PAGE: 29

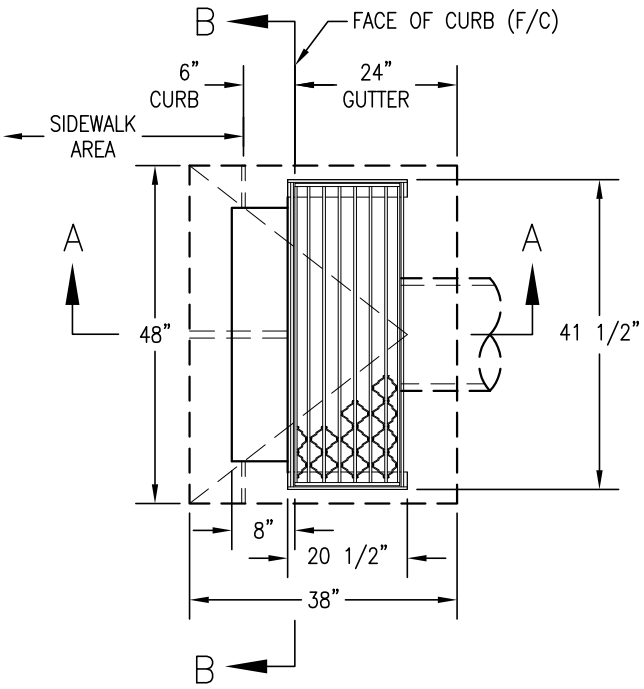

PLAN VIEW
NO SCALE

NOTES:

1. PRECAST CONCRETE CATCH BASIN (C.B.) MAY BE USED SUBJECT TO WRITTEN APPROVAL OF THE CITY ENGINEER.

2. C.B. WALLS MAY BE POURED TO AN ELEVATION NOT LESS THAN 2'-0" BELOW TOP OF CURB. IT SHALL BE THE RESPONSIBILITY OF THE CONTRACTOR TO FRAME IN AND POUR THE UPPER 2'-0" OF THE C.B. MONOLITHICALLY WITH CURB AND GUTTER.

3. WHEN CURB AND SIDEWALK ARE NOT POURED MONOLITHICALLY, CONCRETE CURB POUR SHALL ALSO ENCASE SIDES AND BACK OF HOOD A MINIMUM OF 12" WIDE AND 12" DEEP. SAID ENCASEMENT SHALL BE POURED IN FORM TO PROVIDE STRAIGHT EDGES.

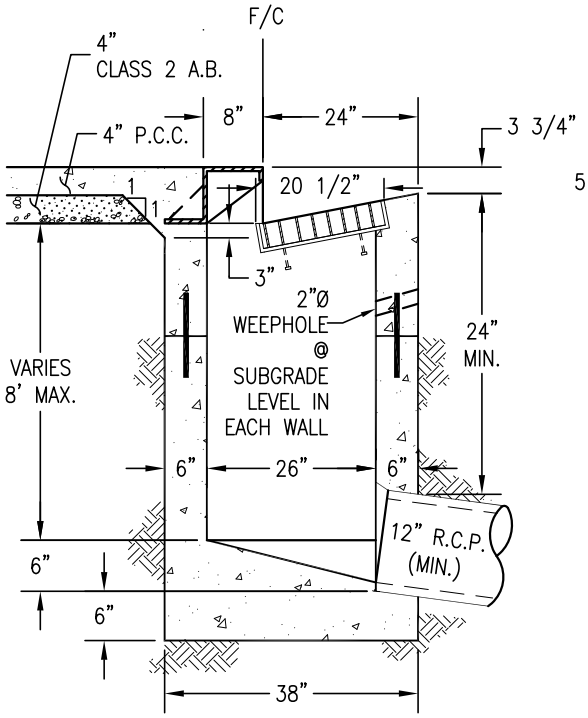

SECTION A-A
NO SCALE

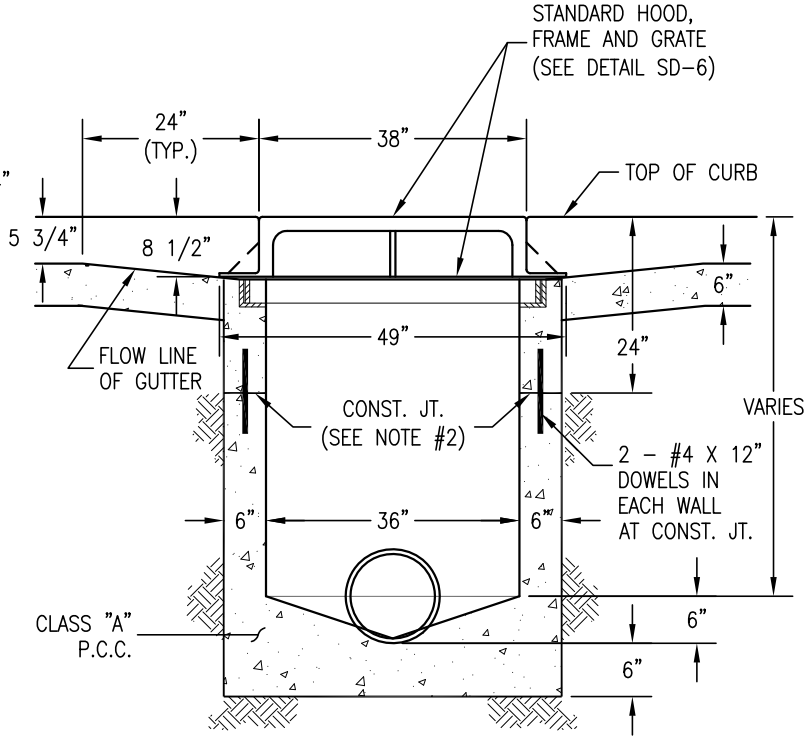

SECTION B-B
NO SCALE

DRAWN BY: K. TRAN	CURB INLET CATCH BASIN	SD-2
CHECKED BY: F. AMIN		
APPROVED BY: G. GOMEZ		
DATE: OCTOBER 2013	CITY OF SANTA CLARA	PAGE: 30

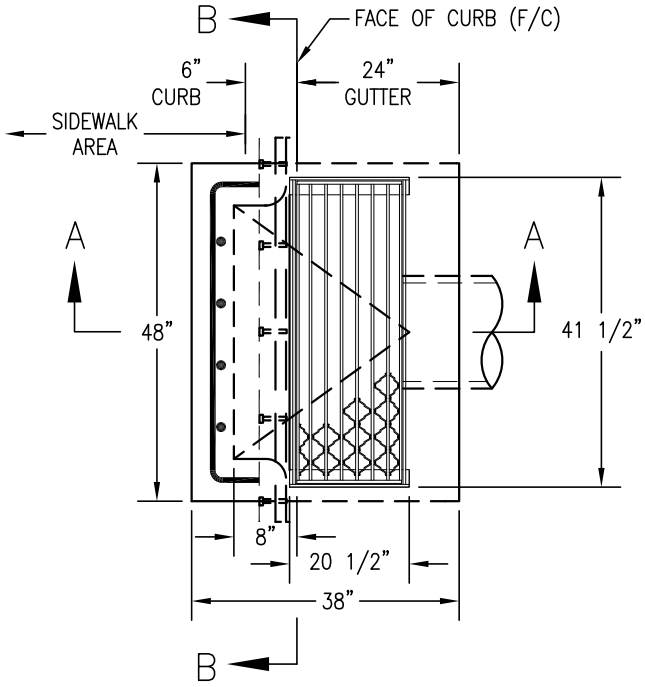

PLAN VIEW
NO SCALE

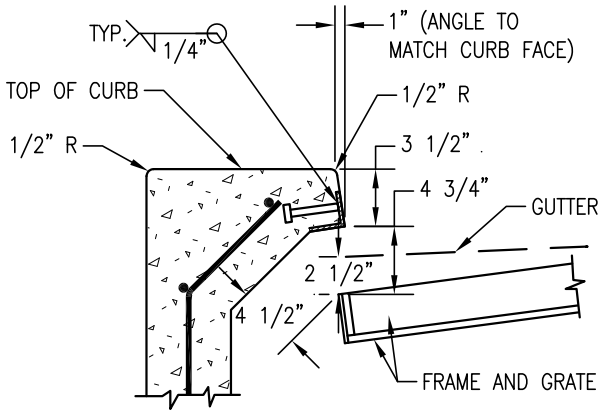

FACE ANGLE ANCHOR DETAIL
NO SCALE

NOTES:

1. FOR APPLICABLE GENERAL NOTES SEE DETAIL SD-2.
2. TYPE "A" CATCH BASIN MAY BE USED ONLY IF WRITTEN APPROVAL IS GRANTED BY THE CITY ENGINEER.
3. WHERE CATCH BASIN IS LOCATED IN CURB RETURN WITH RADIUS < 20', NOTCH AND BEND ANGLE IRON TO MATCH FACE OF CURB.
4. * = DIMENSIONS WITHIN CURB RETURNS.

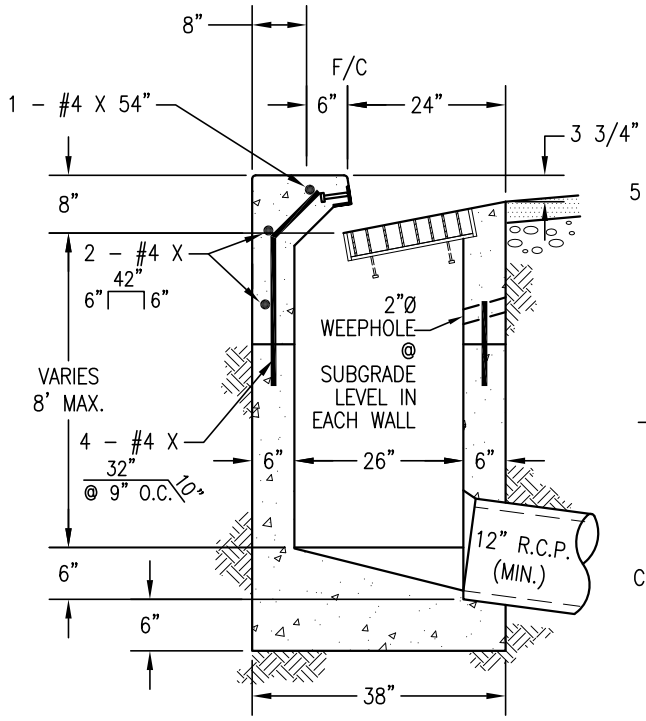

SECTION A-A
NO SCALE

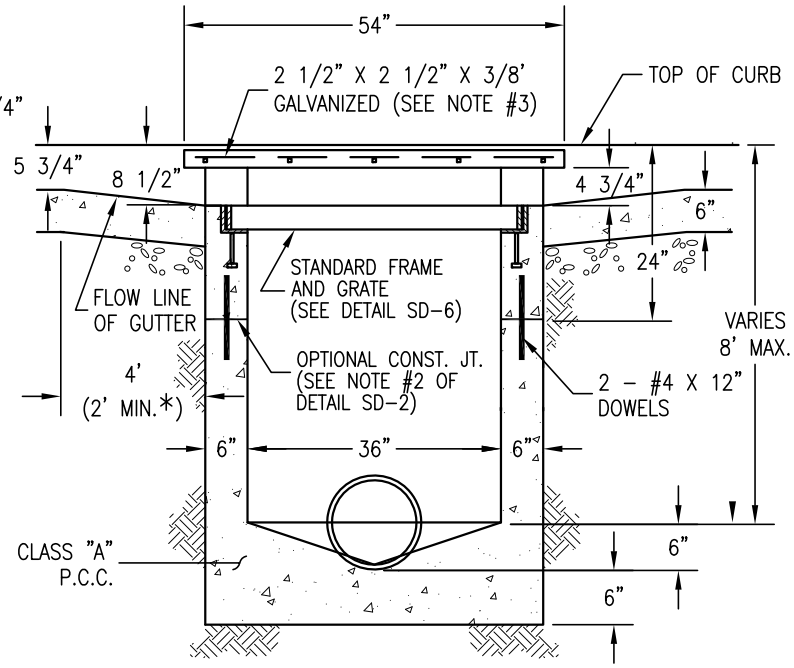

SECTION B-B
NO SCALE

DRAWN BY: K. TRAN	TYPE "A" CURB INLET CATCH BASIN	SD-3
CHECKED BY: F. AMIN		
APPROVED BY: G. GOMEZ		
DATE: OCTOBER 2013	CITY OF SANTA CLARA	PAGE: 31

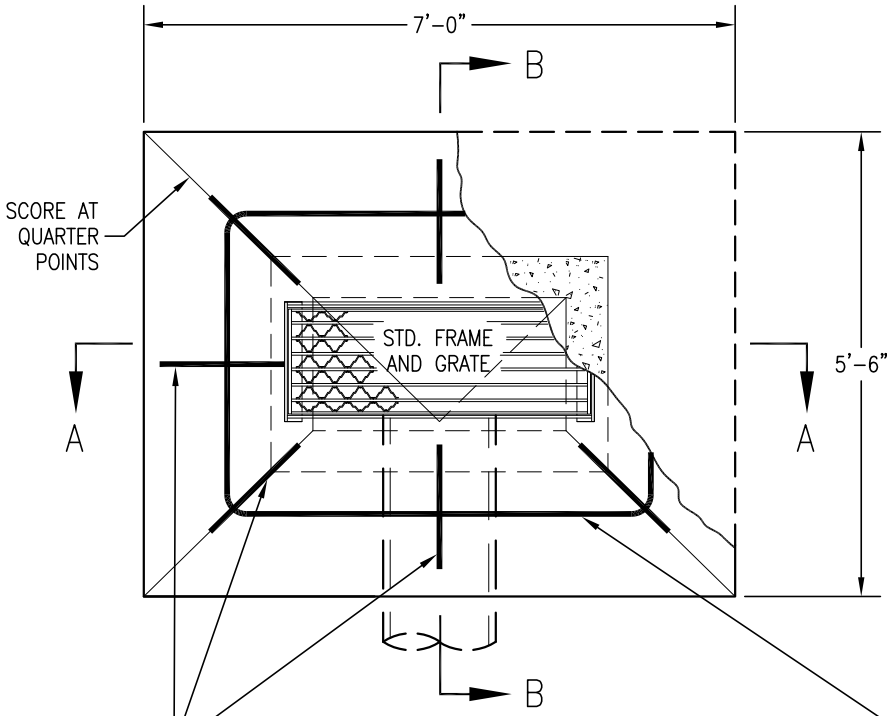

PLAN VIEW
NO SCALE

NOTES:

1. WHERE VALLEY GUTTER MEETS INLET APRON, SHAPE APRON TO CONFORM TO VALLEY GUTTER.
2. PRECAST INLETS MAY BE USED SUBJECT TO WRITTEN APPROVAL OF THE CITY ENGINEER.

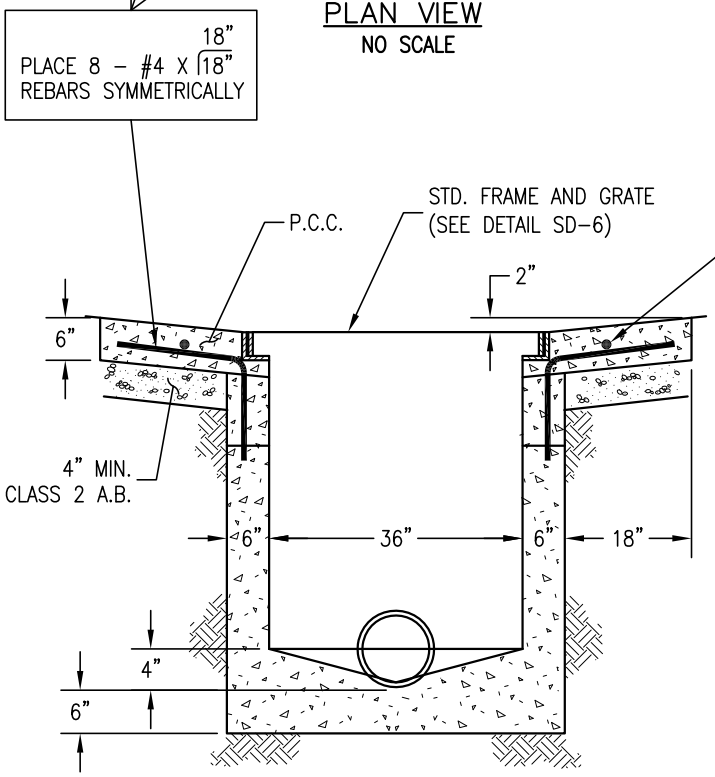

SECTION A–A
NO SCALE

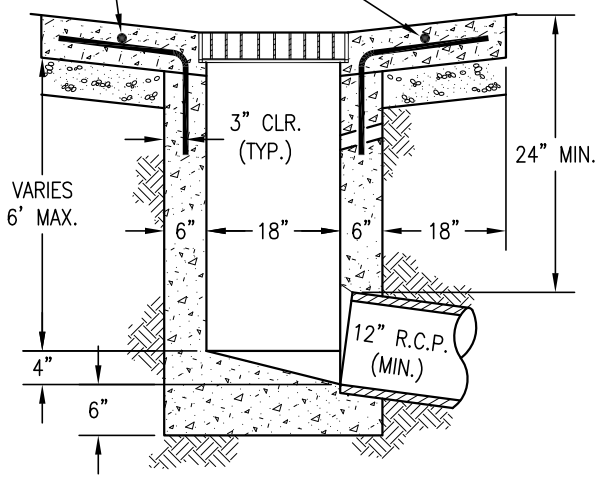

SECTION B–B
NO SCALE

DRAWN BY: K. TRAN	DROP INLET CATCH BASIN	SD-4
CHECKED BY: F. AMIN		
APPROVED BY: G. GOMEZ		
DATE: OCTOBER 2013	CITY OF SANTA CLARA	DATE: 32

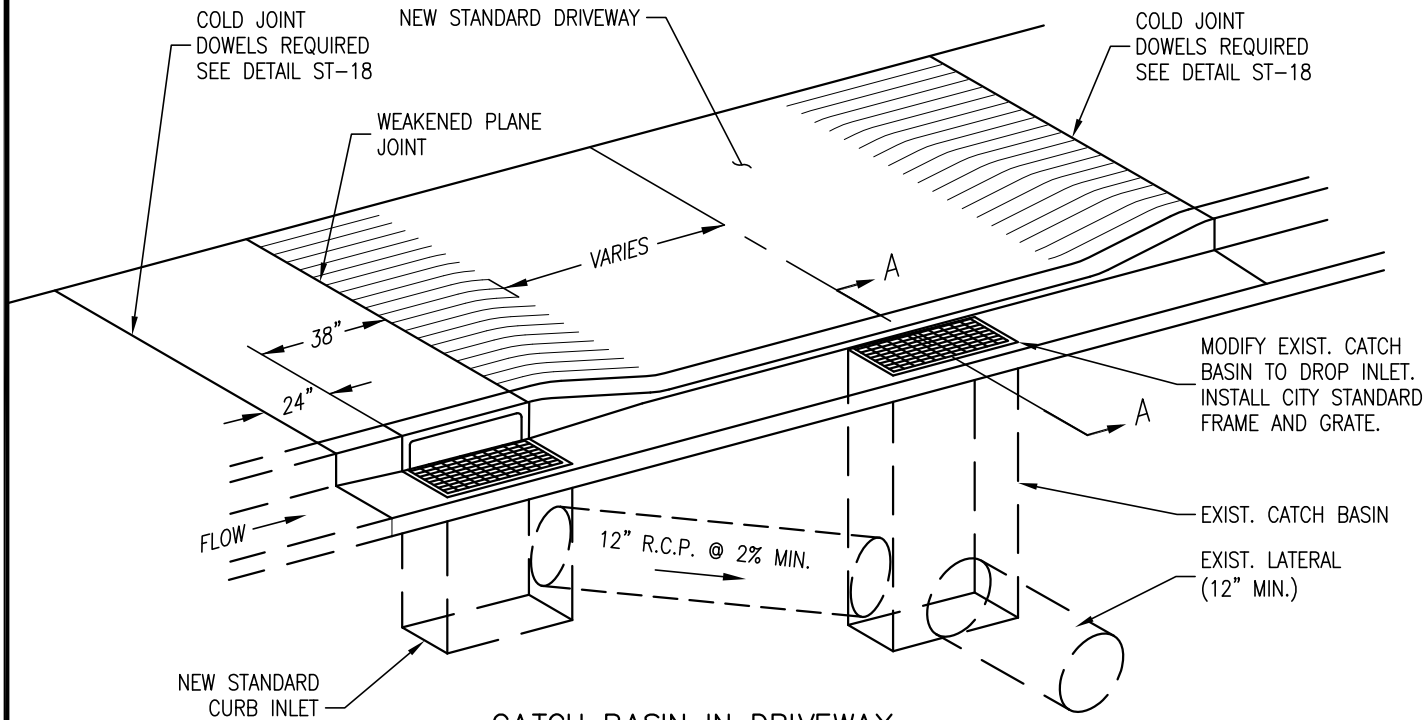

CATCH BASIN IN DRIVEWAY

NO SCALE

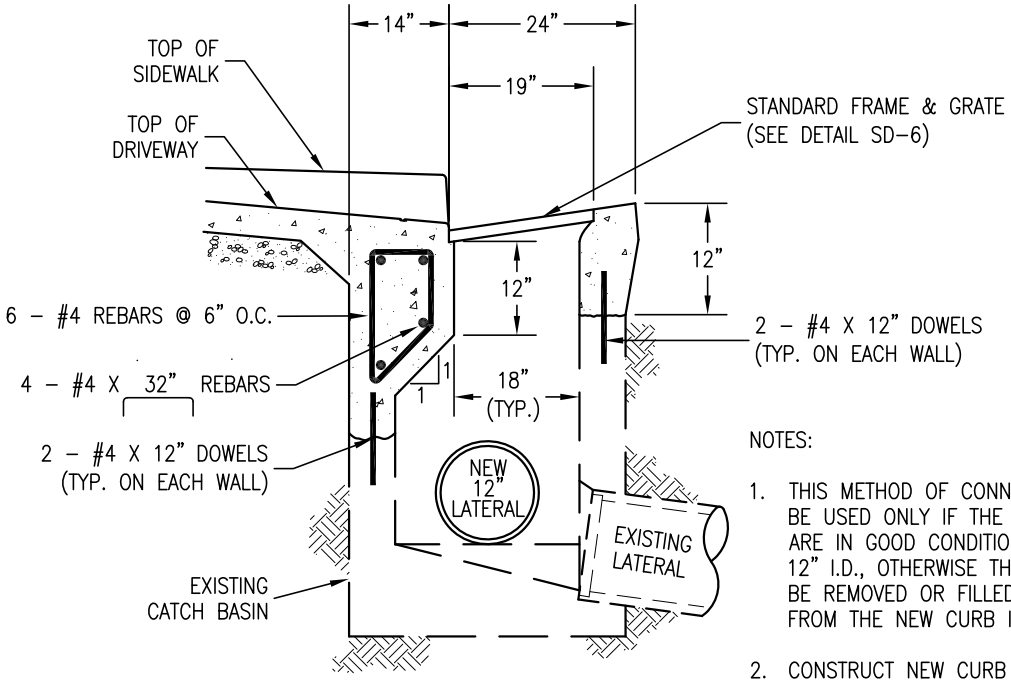

SECTION A–A

NO SCALE

NOTES:

1. THIS METHOD OF CONNECTING A NEW CURB INLET IS TO BE USED ONLY IF THE EXISTING CATCH BASIN AND LATERAL ARE IN GOOD CONDITION AND THE LATERAL IS AT LEAST 12" I.D., OTHERWISE THE EXISTING CATCH BASIN SHALL BE REMOVED OR FILLED IN AND A NEW LATERAL INSTALLED FROM THE NEW CURB INLET TO THE NEAREST MANHOLE.

2. CONSTRUCT NEW CURB INLET ON THE UPSTREAM SIDE OF NEW DRIVEWAY OR "LONGER UPSTREAM RUN" SIDE OF DRIVEWAY IF ORIGINAL CATCH BASIN IS CONSTRUCTED AT A LOW POINT.

DRAWN BY: K. TRAN	ADAPTION FOR EXISTING CATCH BASIN IN NEW DRIVEWAY	SD-5
CHECKED BY: F. AMIN		
APPROVED BY: G. GOMEZ		
DATE: OCTOBER 2013	CITY OF SANTA CLARA	DATE: 33

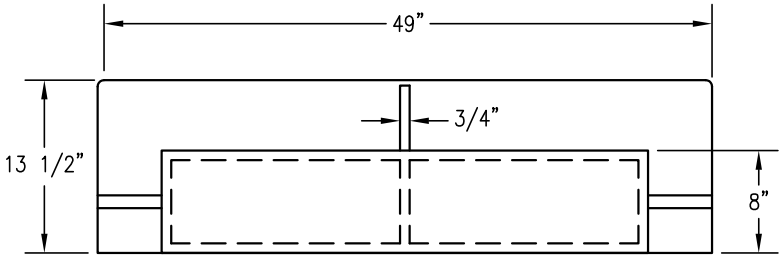

HOOD – PLAN VIEW
NO SCALE

NOTES:
1. HOOD SHALL BE CAST IRON AND BE EQUAL TO SOUTH BAY FOUNDRY SBF 1902. WEIGHT OF HOOD = 175 LBS (APPROX.)
2. CASTING SHALL BE GIVEN A HOT ASPHALT DIP.
3. FRAME & GRATE SHALL BE EQUAL TO METALFAB M–1001.
4. MATERIAL SHALL BE HOT DIP GALVANIZED AFTER FABRICATION.
5. WEIGHT OF FRAME = 80 LBS. (TYP.)
WEIGHT OF GRAGE = 130 LBS. (TYP.)

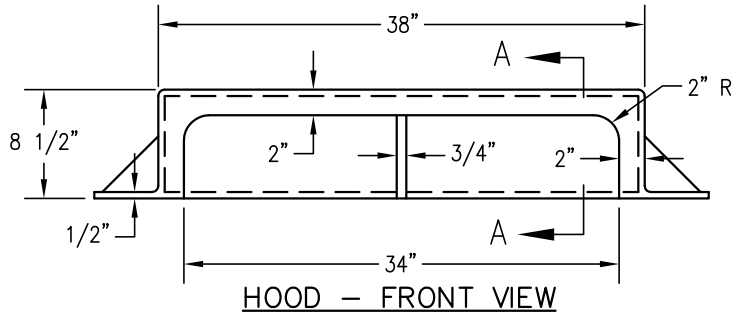

HOOD – FRONT VIEW
NO SCALE

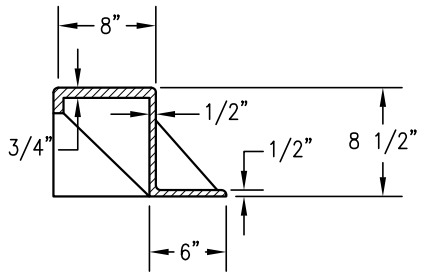

SECTION A–A
NO SCALE

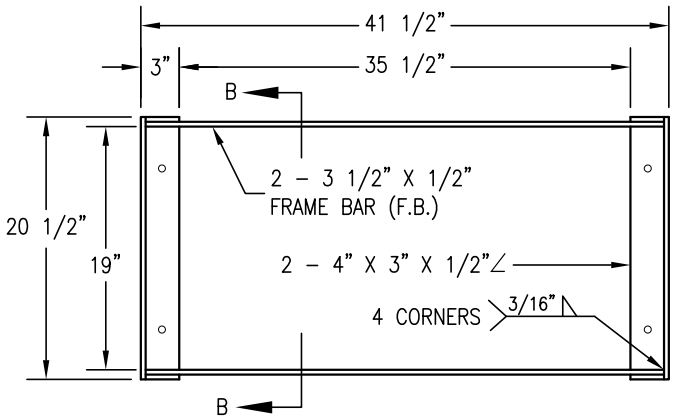

FRAME – PLAN VIEW
NO SCALE

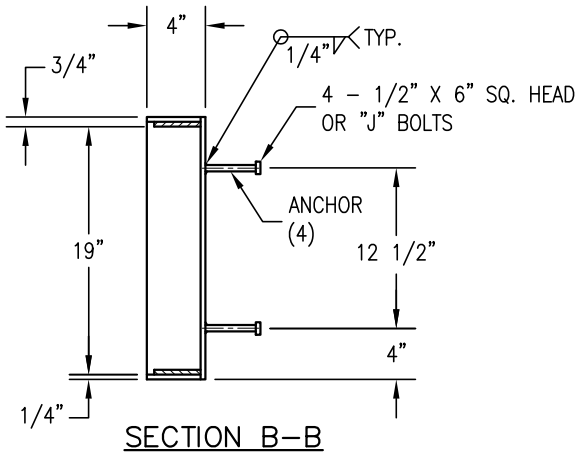

SECTION B–B
NO SCALE

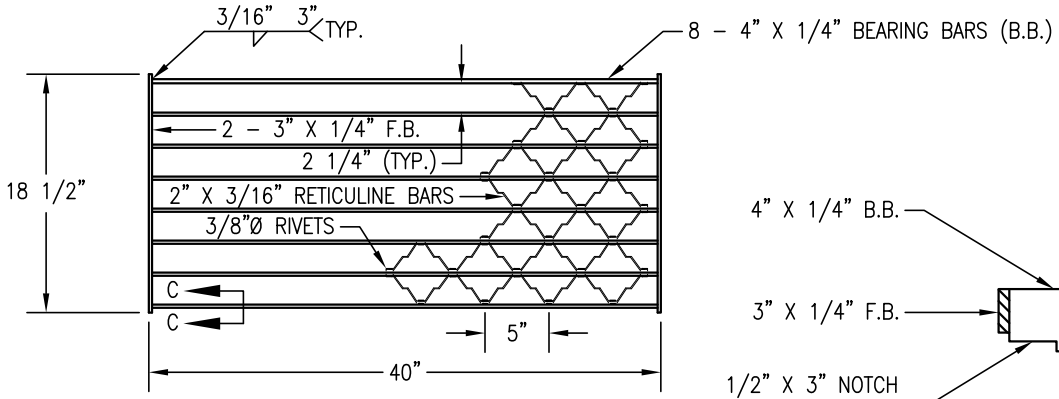

GRATE – PLAN VIEW
NO SCALE

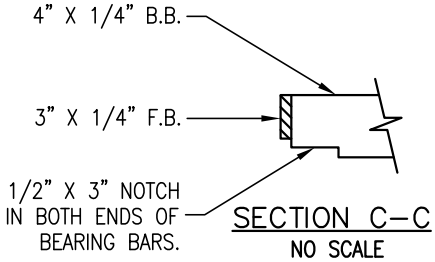

SECTION C–C
NO SCALE

DRAWN BY: K. TRAN	CATCH BASIN HOOD, FRAME AND GRATE	SD-6
CHECKED BY: F. AMIN		
APPROVED BY: G. GOMEZ		
DATE: OCTOBER 2013	CITY OF SANTA CLARA	PAGE: 34

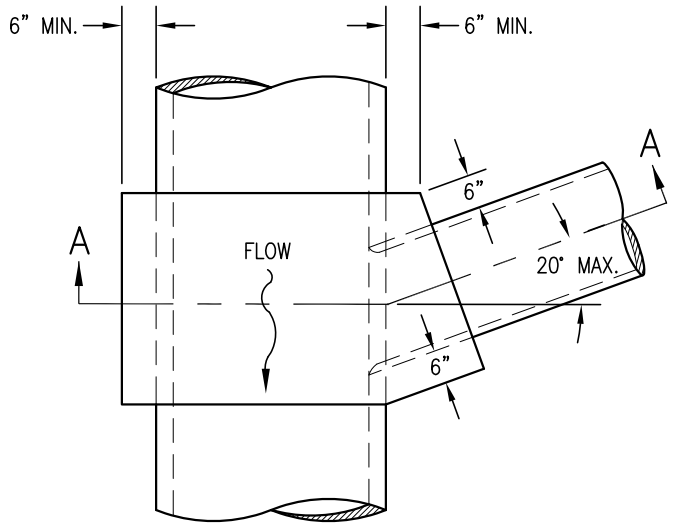

SKEWED CONNECTION
PLAN VIEW
NO SCALE

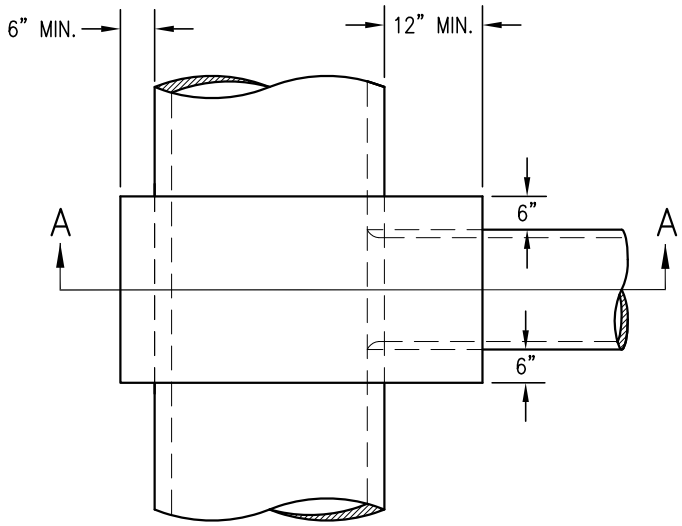

PERPENDICULAR CONNECTION
PLAN VIEW
NO SCALE

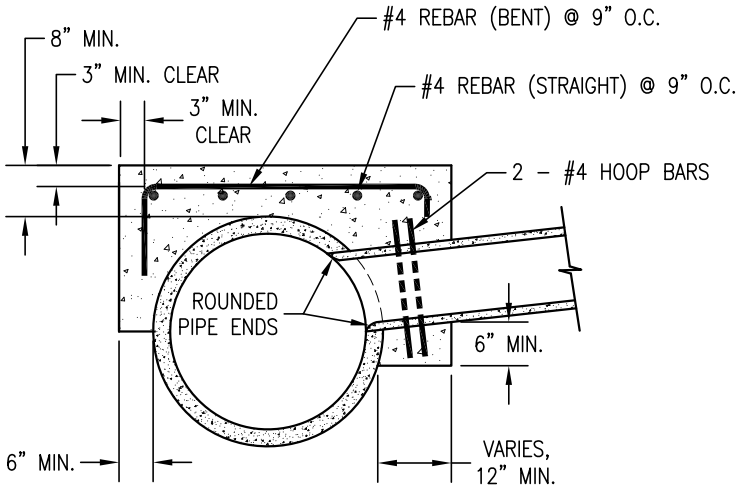

SECTION A–A
NO SCALE

NOTES:

1. CONCRETE LUG CONNECTION MAY BE USED ONLY AT LOCATIONS APPROVED BY THE CITY ENGINEER.
2. THE LARGER PIPE SHALL NOT BE LESS THAN 48" I.D.
3. THE SMALLER PIPE SHALL NOT BE LESS THAN 12" I.D. OR MORE THAN 15" I.D.
4. INVERT OF SMALLER PIPE SHALL NOT BE LOWER THAN MID–HEIGHT OF LARGER PIPE.
5. THE END OF THE CONNECTING PIPE SHALL NOT PROJECT INTO THE WATERWAY OF THE LARGER PIPE.
6. CONCRETE SHALL BE CLASS "A".

DRAWN BY: K. TRAN	CONCRETE LUG	SD-7
CHECKED BY: F. AMIN		
APPROVED BY: G. GOMEZ		
DATE: OCTOBER 2013	CITY OF SANTA CLARA	PAGE: 35

CONNECTION TO PUBLIC STORM DRAIN SYSTEM

CASE A: CONNECTION TO MAINS LESS THAN 48" IN DIAMETER

1. Lateral connection shall require a manhole.
2. Lateral diameter shall be 12" or greater. A lateral diameter greater than 50% of the main diameter or greater than 18" shall require the review and approval of the City Engineer.
3. An accessible cleanout structure at the property line is NOT required.
4. A lateral that connects directly from an on-site collection system to a City manhole, shall be maintained by the owner of the serviced property.

CASE B: CONNECTION TO MAINS 48" IN DIAMETER OR GREATER

1. Lateral connection shall require a junction structure designed by a registered Civil Engineer.
2. Lateral diameter shall be 12" or greater. A lateral diameter greater than 50% of the main diameter or greater than 18" shall require the review and approval of the City Engineer.
3. An accessible cleanout structure at the property line is NOT required.
4. A lateral that connects directly from an on-site collection system to a City junction box, shall be maintained by the owner of the serviced property.

CASE C: CONNECTION OF PRIVATE PIPE SYSTEM TO STREET CATCH BASIN

1. Pipe connection shall be made at the back of the existing catch basin.
2. Pipe diameter shall not be less than 4" nor greater than 12".
3. Cleanout structure at the property line is NOT required.
4. Pipe from site to the catch basin shall be maintained by the owner of the serviced property.

CASE D: CURB FACE DRAINAGE OUTLET

1. A "Curb Face Drainage Outlet" (see Standard Details SD-1) may be used only at locations approved by the City Engineer.
2. The pipe shall be 3"-diameter galvanized steel.
3. The channel shall be 8" or wider by 3" high galvanized steel.
4. A cleanout structure at the property line is NOT required.
5. The "Curb Face Drainage Outlet" shall be maintained by the owner of the serviced property.

NOTE: Backflow preventive devices may be required by the City Engineer when it is determined that the potential for flooding due to the surcharge of the storm drainage system exists. These devices shall be located within the private property (outside the public right-of-way and City easements) and shall be maintained by the owner of the serviced property (see Design Criteria).

Department of Public Works
City of Santa Clara, CA

STANDARD DETAILS

SANITARY SEWER SECTION

DETAILS SS-1 TO SS-6

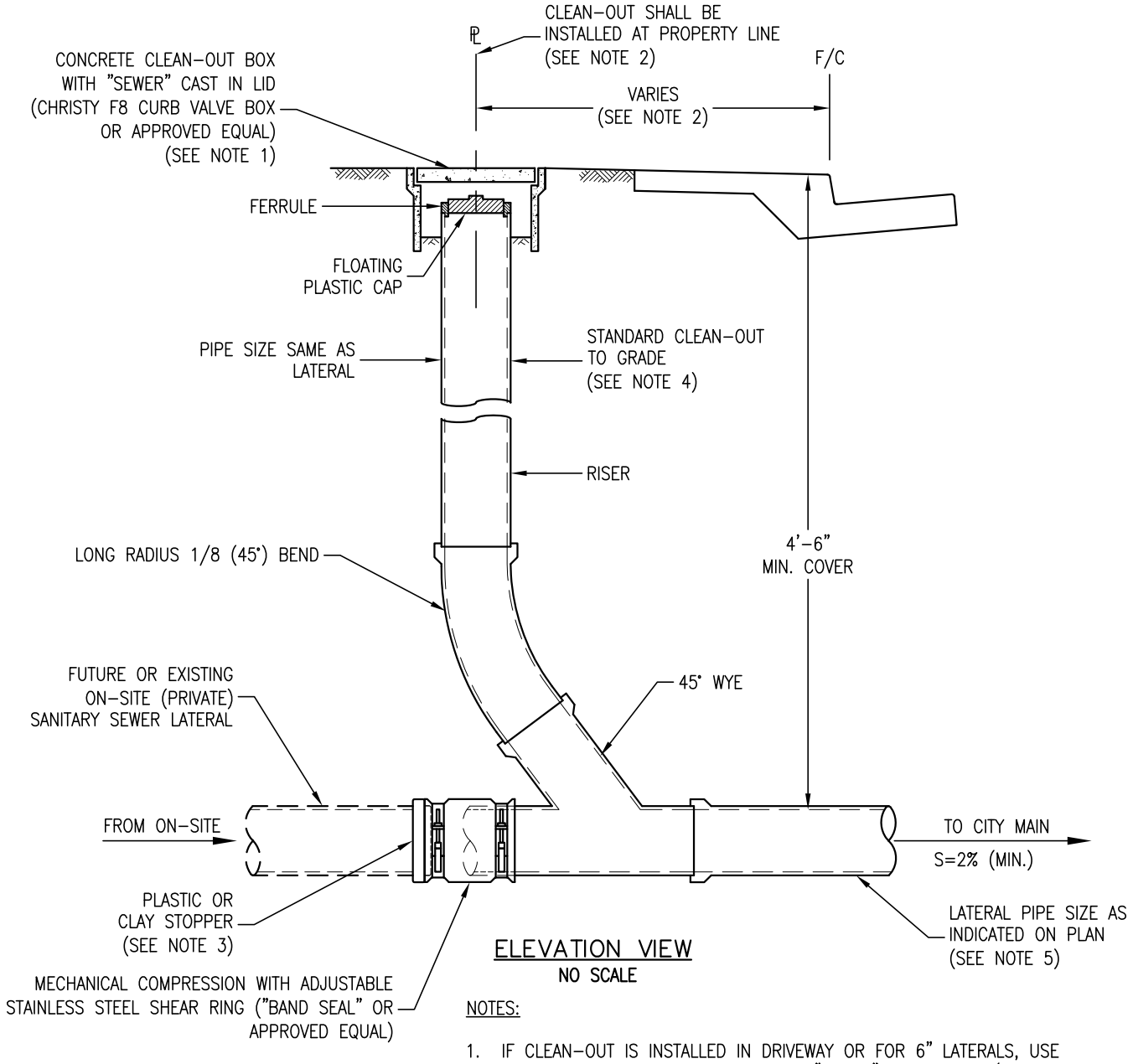

ELEVATION VIEW

NO SCALE

NOTES:

1. IF CLEAN-OUT IS INSTALLED IN DRIVEWAY OR FOR 6" LATERALS, USE CHRISTY G5 TRAFFIC VALVE BOX WITH "SEWER" CAST IN LID (OR APPROVED EQUAL). BOX SHALL HAVE A CONCRETE COLLAR. (SEE DETAIL DS-6 FOR DETAILS OF CONCRETE COLLAR)

2. WHEN PROPERTY LINE IS AT BACK OF WALK, INSTALL CLEAN-OUT BEHIND BACK OF WALK.

3. PROVIDE STOPPER WHEN THERE IS NO ON-SITE LATERAL CONNECTION.

4. FOR NEW LATERALS, THE MATERIAL FOR THE CLEANOUT PIPE SHALL MATCH THE MATERIAL FOR THE LATERAL. SEE CITY'S SPECIFICATIONS FOR MATERIALS. FOR EXISTING LATERALS, THE REPAIR OR REPLACEMENT MATERIAL FOR THE CLEANOUT PIPE SHALL COMPLY WITH STANDARDS FROM THE LATEST EDITION OF THE CALIFORNIA PLUMPING CODE. USE APPROPRIATE COUPLINGS.

5. FOR 8" OR LARGER LATERALS, A STANDARD MANHOLE SHALL BE INSTALLED AT OR NEAR THE PROPERTY LINE.

DRAWN BY: K. TRAN	4" & 6" SANITARY SEWER CLEAN-OUT	SS-1
CHECKED BY: F. AMIN		
APPROVED BY: G. GOMEZ		
DATE: DECEMBER 2014	CITY OF SANTA CLARA	PAGE: 37

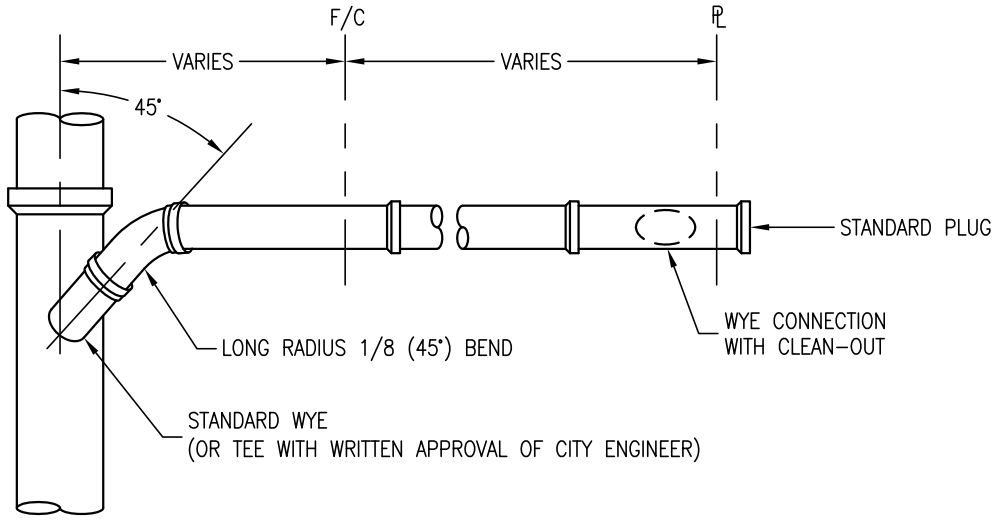

PLAN VIEW
NO SCALE

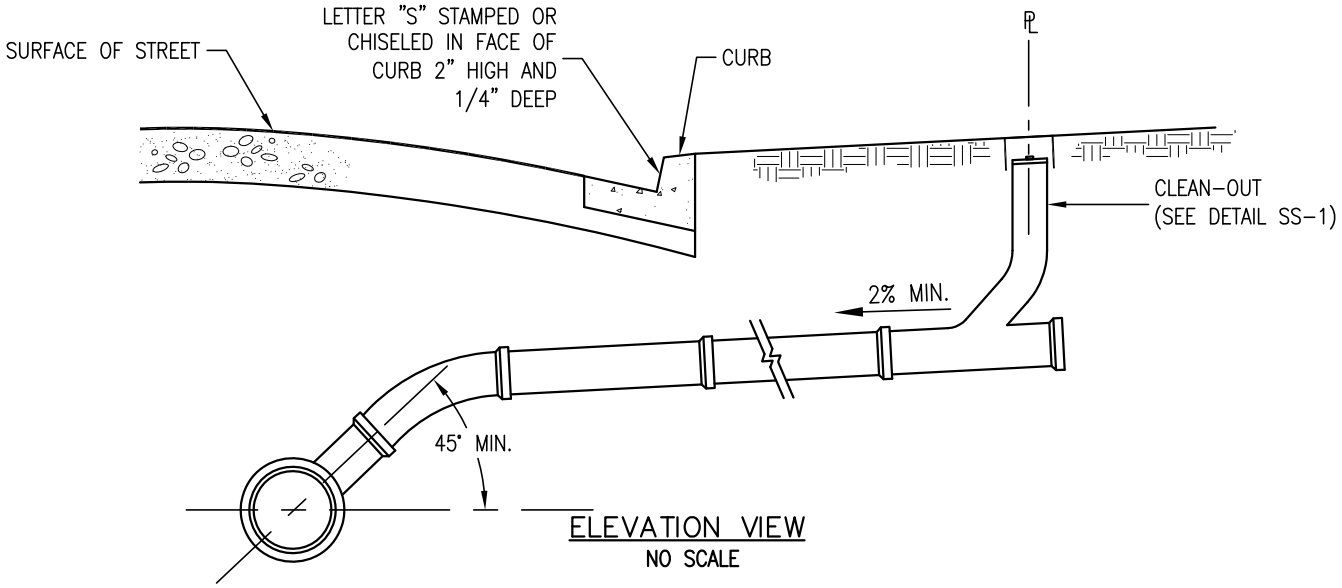

ELEVATION VIEW
NO SCALE

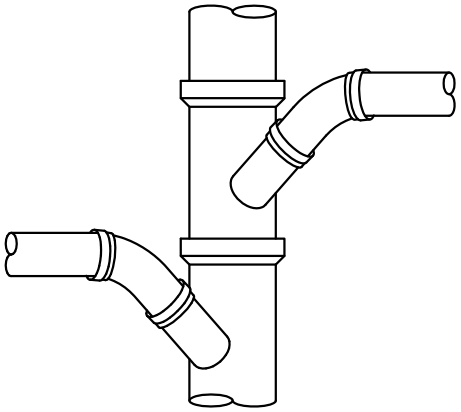

OPPOSITE LATERALS – PLAN VIEW
NO SCALE

NOTES:

1. IN NO CASE SHALL A LATERAL CONNECT TO THE SANITARY SEWER MAIN DIRECTLY ON TOP OF THE PIPE.
2. ONLY ONE CONNECTION MAY BE MADE IN EACH SECTION OF SANITARY SEWER MAIN.
3. SANITARY SEWER LATERALS SHALL HAVE A MINIMUM SLOPE OF 2%.
4. ALL LATERAL PIPE JOINTS SHALL BE COMPRESSION TYPE.
5. LATERAL SHALL EXTEND TO PROPERTY LINE UNLESS OTHERWISE NOTED, AND A CLEANOUT SHALL BE INSTALLED AT THE PROPERTY LINE. (SEE DETAIL SS-1)

DRAWN BY: K. TRAN	4" & 6" SANITARY SEWER LATERAL CONNECTION	SS-2
CHECKED BY: F. AMIN		
APPROVED BY: G. GOMEZ		
DATE: OCTOBER 2013	CITY OF SANTA CLARA	PAGE: 38

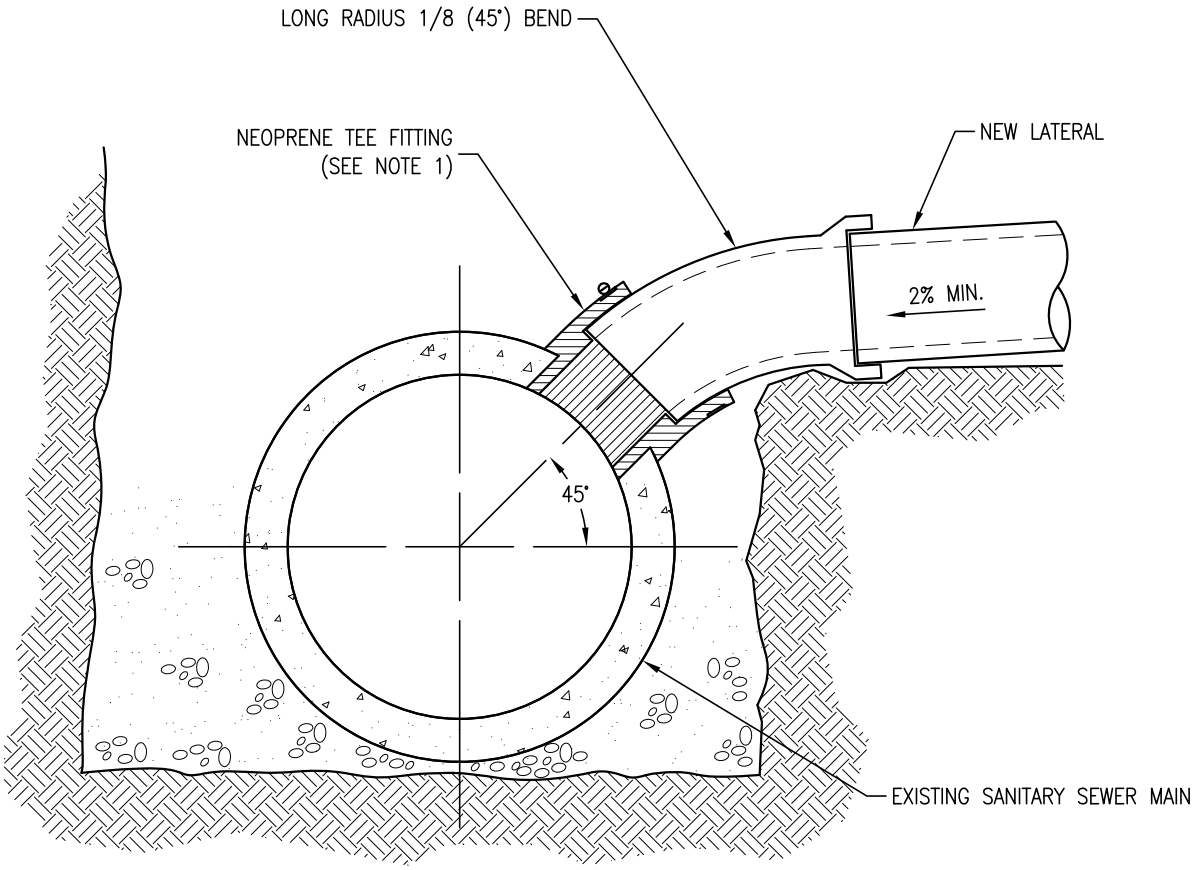

NOTES:

1. SYNTHETIC RUBBER CONNECTION FITTING WITH WEDGED INSERT AND MECHANICALLLY TIGHTENED STAINLESS STEEL BAND. HOLE TO BE DRILLED WITH A POWER DRIVEN CUTTER PRODUCING A SMOOTH SURFACE ("TAP–TITE" OR APPROVED EQUAL).

2. THIS LATERAL TAP CONNECTION DETAIL SHALL BE APPLICABLE ONLY TO LATERALS WITH INSIDE PIPE DIAMETER OF 4" OR 6". LATERALS GREATER THAN 6" SHALL CONNECT TO MAINS IN MANHOLES.

3. MORE THAN ONE LATERAL TAP CONNECTION IN ANY SECTION OF SANITARY SEWER MAIN IS SUBJECT TO THE WRITTEN APPROVAL OF THE CITY ENGINEER.

4. WHERE 6" LATERALS CONNECT TO 8" MAINS, OR 4" LATERALS CONNECT TO 6" MAINS, THE MAIN AND TEE FITTING SHALL BE ENCASED WITH CONCRETE TO A LEVEL OF THREE INCHES ABOVE THE TOP OF THE SANITARY SEWER MAIN.

5. IF THE SANITARY SEWER MAIN IS NOT IN SOUND CONDITION, THE ENTIRE SECTION OF THE MAIN SHALL BE REMOVED AND REPLACED, AND THE LATERAL SHALL BE CONNECTED PER CITY STANDARD "4" & 6" SANITARY SEWER LATERAL CONNECTION" (SEE DETAIL SS–2).

6. FOR 8" OR LARGER LATERALS, A STANDARD MANHOLE SHALL BE INSTALLED AT OR NEAR THE PROPERTY LINE.

DRAWN BY: K. TRAN	4" & 6" SANITARY SEWER LATERAL CONNECTION TO EXISTING MAIN	SS-3
CHECKED BY: F. AMIN		
APPROVED BY: G. GOMEZ		
DATE: OCTOBER 2013	CITY OF SANTA CLARA	PAGE: 39

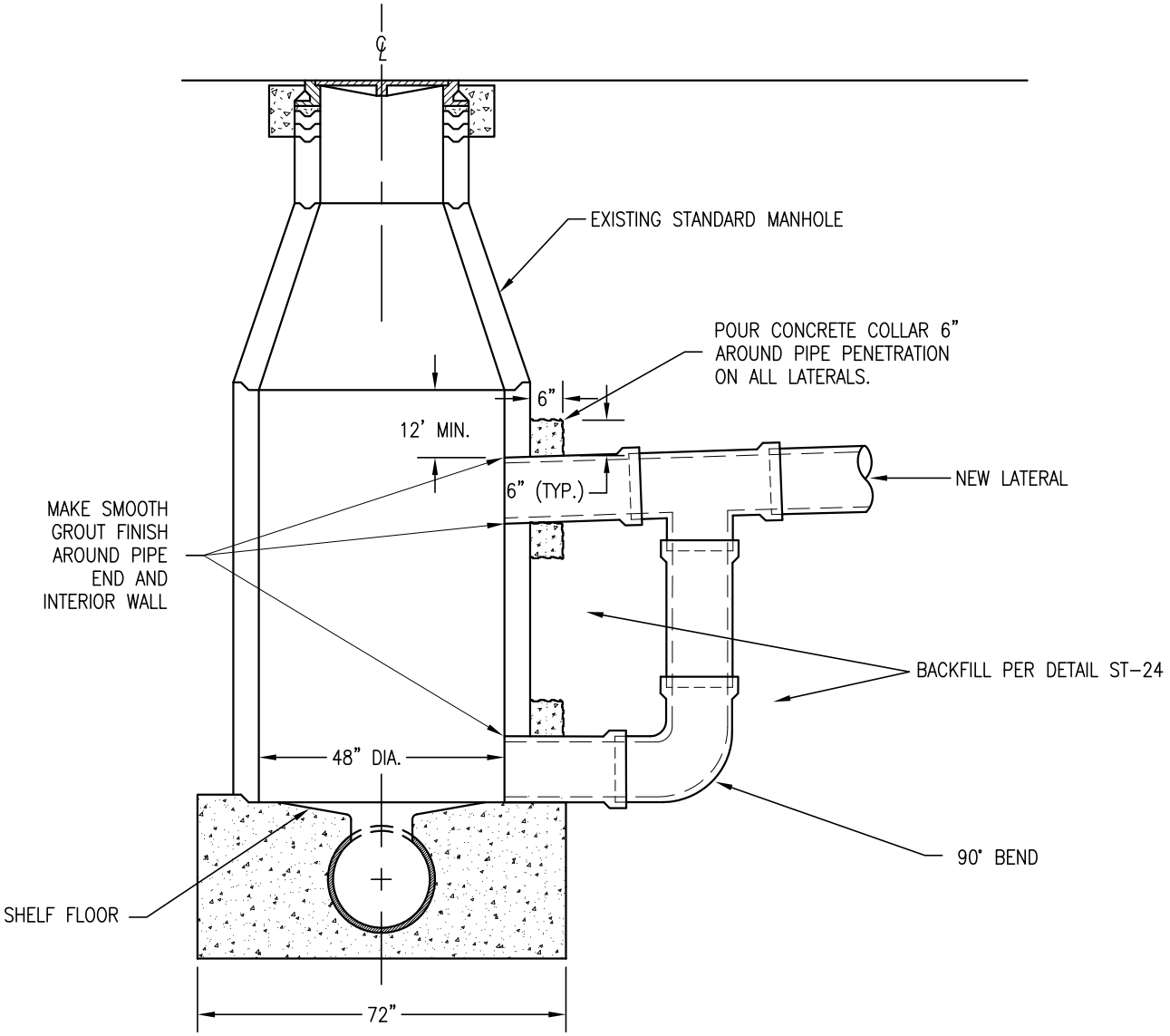

ELEVATION VIEW
NO SCALE

NOTES:
1. NEW LATERAL MUST ENTER MANHOLE AT OR ABOVE THE SHELF FLOOR OF THE EXISTING MANHOLE.
2. USE OF DROP MANHOLE ALLOWED ONLY WITH WRITTEN APPROVAL OF CITY ENGINEER.

DRAWN BY: K. TRAN	STANDARD DROP MANHOLE	SS-4
CHECKED BY: F. AMIN		
APPROVED BY: G. GOMEZ		
DATE: OCTOBER 2013	CITY OF SANTA CLARA	PAGE: 40

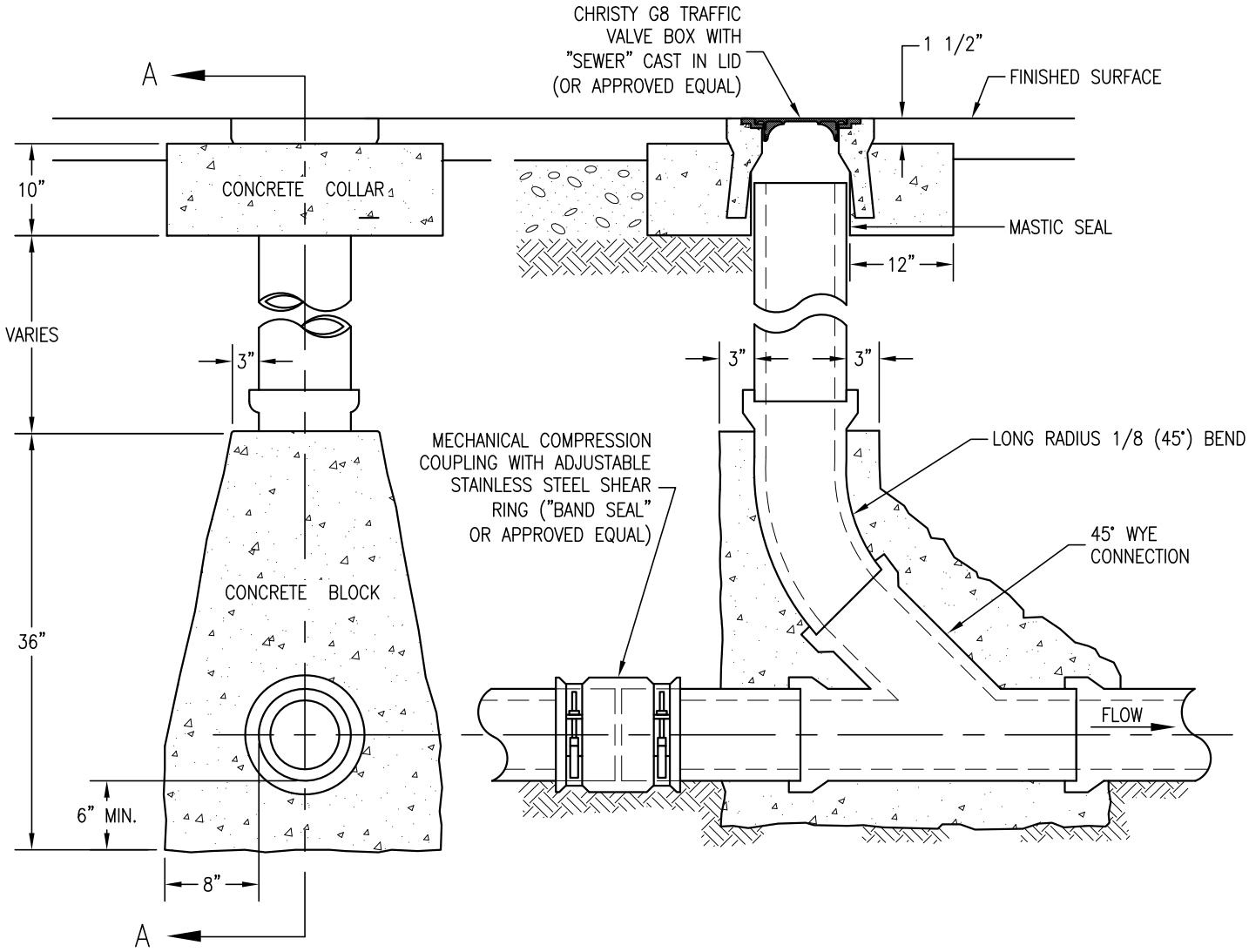

FRONT VIEW
NO SCALE

SECTION A–A
NO SCALE

NOTE: FLUSHING INLETS MAY BE USED ONLY WITH WRITTEN APPROVAL OF THE CITY ENGINEER.

DRAWN BY: K. TRAN	FLUSHING INLET	SS-5
CHECKED BY: F. AMIN		
APPROVED BY: G. GOMEZ		
DATE: OCTOBER 2013	CITY OF SANTA CLARA	PAGE: 41

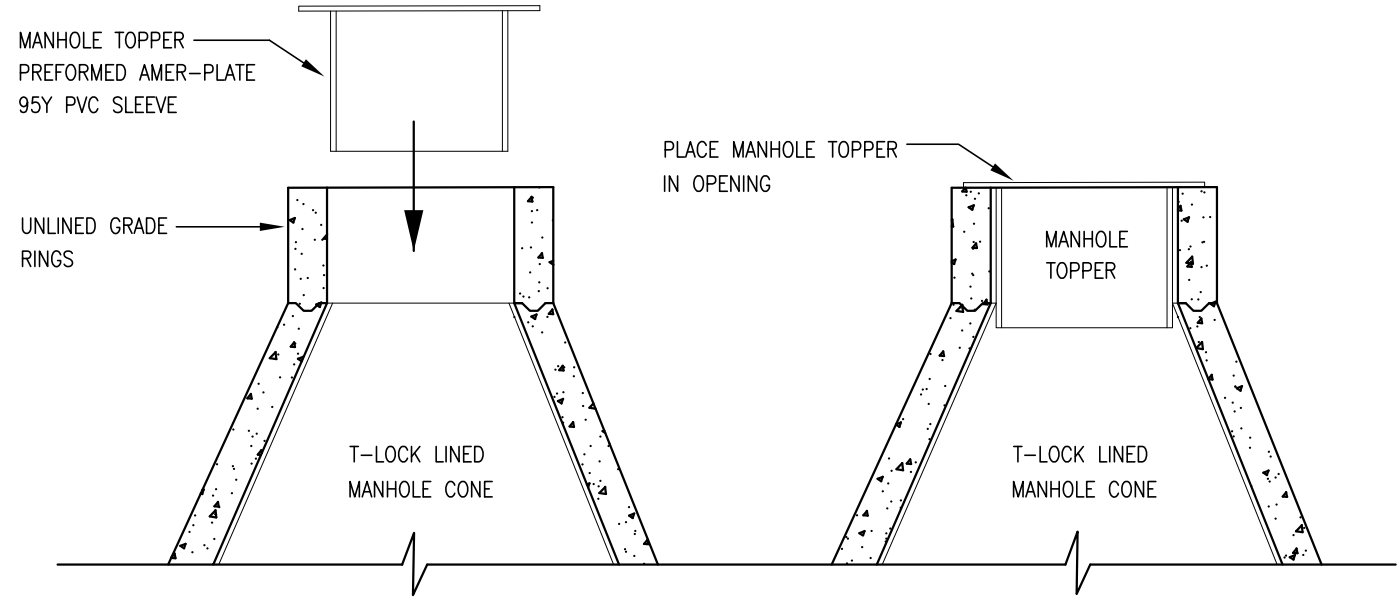

STEP 1

STEP 2

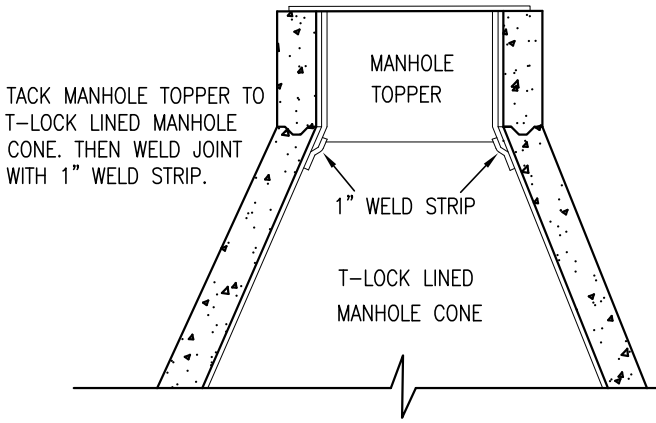

STEP 3

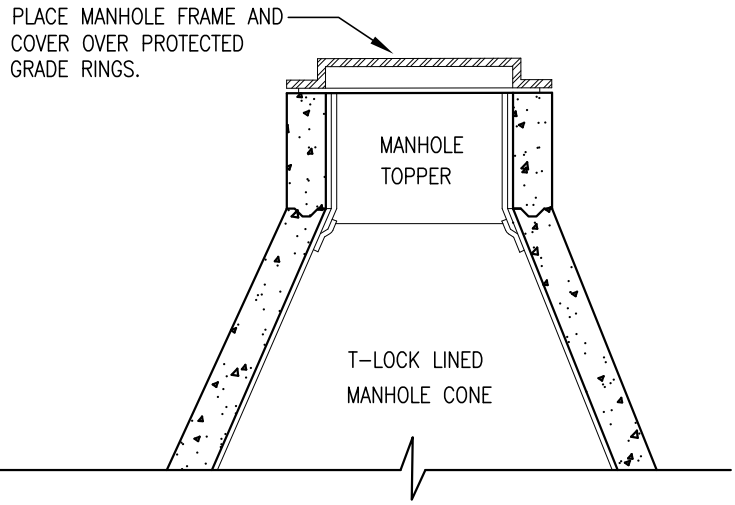

STEP 4

AMER-PLATE PROTECTION FOR GRADE RINGS

NOTE:

1. FOR LINING PRODUCTS, CONTACT AMERON INTERNATIONAL PROTECTIVE LINING PRODUCTS, 201 NORTH BERRY STREET, P.O. BOX 1629, BREA, CA 92822-1629, PHONE (714) 256-7755, FAX (714) 256-7750, OR APPROVED EQUAL.

2. ALL T-LOCK LINER JOINTS MUST BE WELDED WITH 1" WELD STRIP (TYP.)

DRAWN BY: K. TRAN	SANITARY SEWER MANHOLE TOPPER	SS-6
CHECKED BY: F. AMIN		
APPROVED BY: G. GOMEZ		
DATE: DECEMBER 2014	CITY OF SANTA CLARA	PAGE: 42

Department of Public Works
City of Santa Clara, CA

STANDARD DETAILS

DRAINAGE STRUCTURE SECTION

DETAILS DS-1 TO DS-6

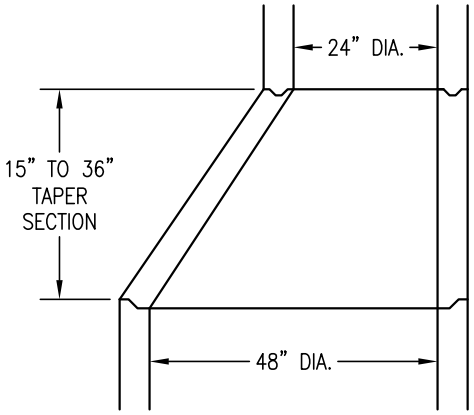

ECCENTRIC MANHOLE
(OPTION FOR STORM DRAIN MANHOLE ONLY)

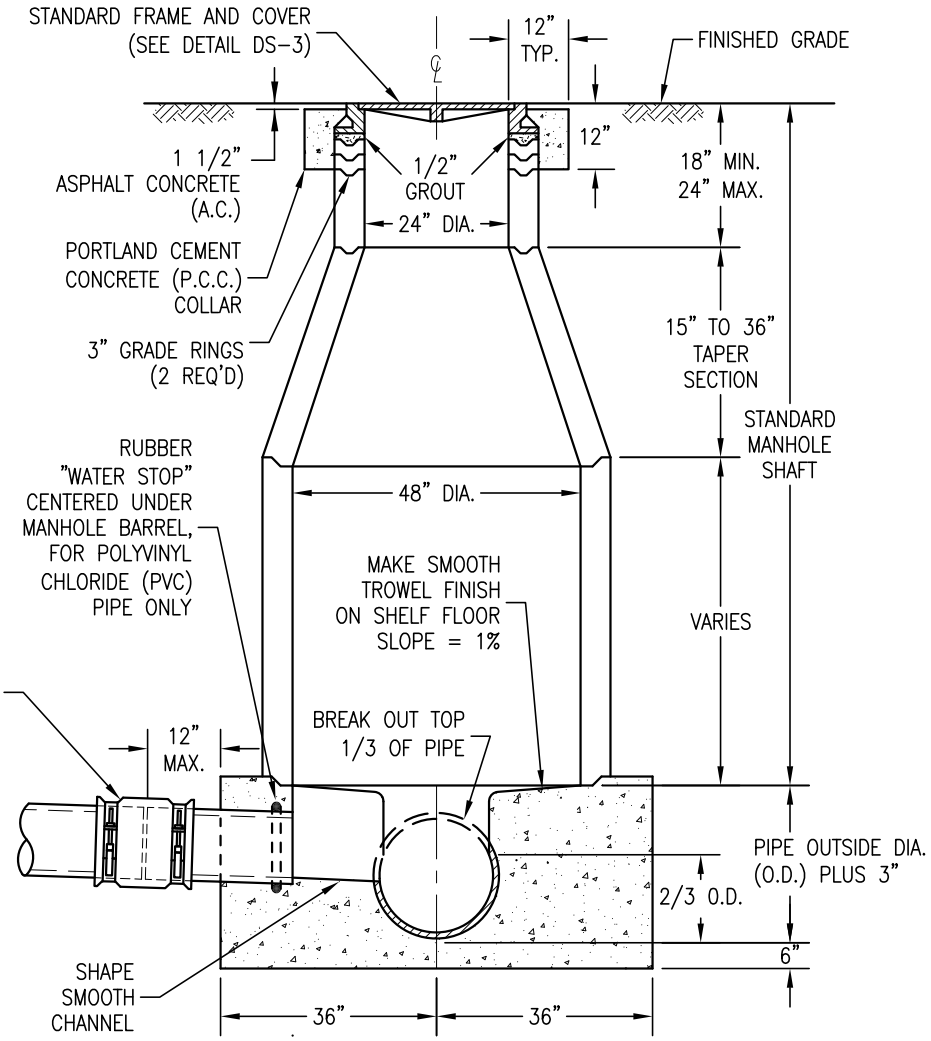

CONCENTRIC MANHOLE – ELEVATION VIEW
NO SCALE

NOTES:

1. MANHOLE BASE SHALL BE POURED ON UNDISTURBED GROUND. IF OVER EXCAVATION OCCURS BELOW MANHOLE BASE, BACKFILL WITH CONCRETE. AN APPROVED 'IMPRESSION RING' MUST BE USED TO FORM KEYWAY FOR MANHOLE BARREL SECTION.
2. INTERSECTING LATERALS' AND MAINS' CROWNS SHALL MATCH.
3. ALL JOINTS SHALL BE SEALED WITH "RAMNEK" OR APPROVED EQUAL.
4. CENTER OF ECCENTRIC MANHOLE COVER SHALL BE LOCATED OVER THE CENTER OF THE MAIN ON THE UPSTREAM SIDE.
5. TYPE V PORTLAND CEMENT FOR SANITARY SEWER STRUCTURES AND TYPE II PORTLAND CEMENT FOR STORM DRAIN STRUCTURES.
6. BELL END OF PIPE SHALL BE 12" MAX. FROM WALL OF MANHOLE
7. THIS DESIGN IS USABLE FOR PIPES UP TO 39" DIA. ONLY.
8. ALL SANITARY SEWER MANHOLES SHALL BE LINED WITH INTEGRALLY LOCKING PVC (T-LOCK) OR APPROVED EQUAL. ALL T-LOCK LINER JOINTS MUST BE WELDED WITH 1" WELD STRIP. GRADE RINGS SHALL BE PVC LINED VIA THE MANHOLE TOPPER BY AMERON OR APPROVED EQUAL. SEE DETAIL SS-6.
9. BACKFILL AROUND THE MANHOLE AND ANY NEW OR EXISTING PIPE CONNECTION(S) SHALL CONFORM TO DETAIL ST-24.

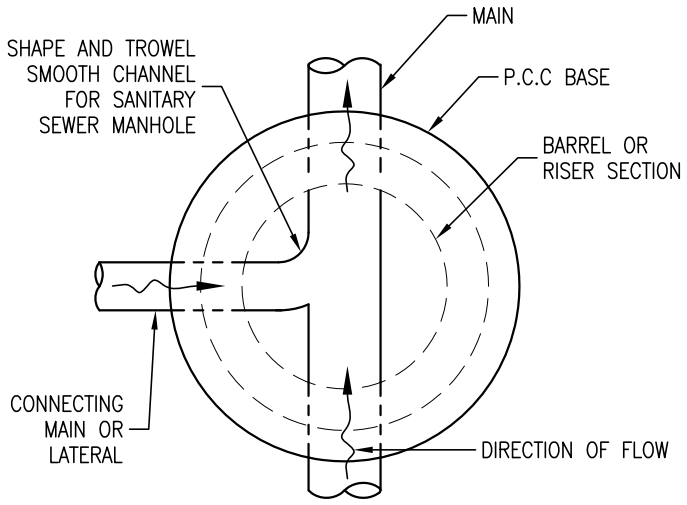

BOTTOM VIEW
NO SCALE

THE CITY OF SANTA CLARA CALIFORNIA The Mission City INCORPORATED 1852	DRAWN BY: K. TRAN	MANHOLE	DS-1
	CHECKED BY: F. AMIN		
	APPROVED BY: F. AMIN		
	DATE: JANUARY 2016	CITY OF SANTA CLARA	PAGE: 43

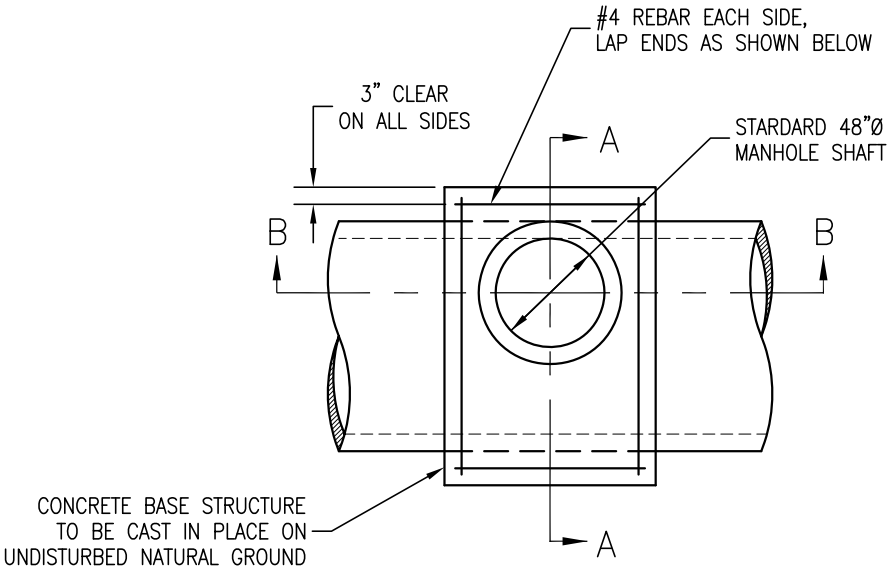

PLAN VIEW
NO SCALE

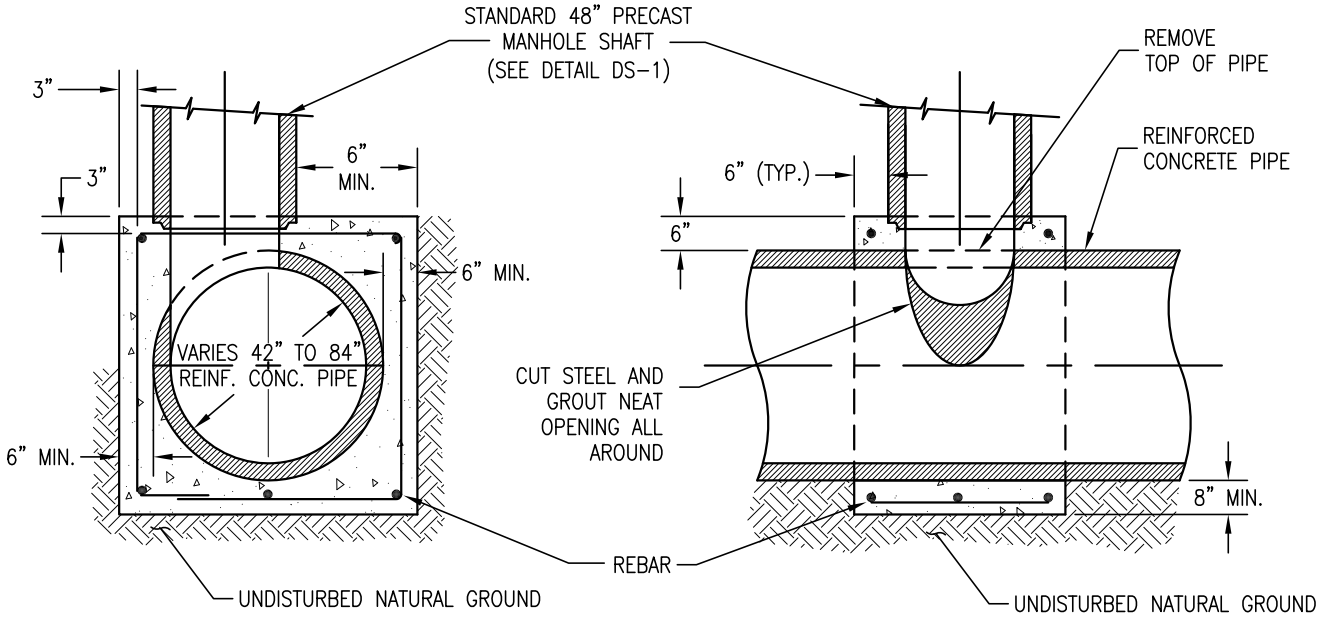

SECTION A–A
NO SCALE

SECTION B–B
NO SCALE

NOTES:

1. MANHOLE SHAFT SHALL BE CENTERED AT MID–LENGTH OF PIPE SECTION.
2. DETAIL NOT APPLICABLE WHERE PIPE DEFLECTION OCCURS AT MANHOLE. SPECIAL MANHOLE BASE DETAIL REQUIRED IF LOCATED AT PIPE JOINT.
3. ALL JOINTS SHALL BE SEALED WITH "RAMNEK" OR APPROVED EQUAL.
4. BACKFILL AROUND THE MANHOLE AND ANY NEW OR EXISTING PIPE CONNECTION(S) SHALL CONFORM TO DETAIL ST–24.

DRAWN BY: K. TRAN	TYPE "A" MANHOLE	DS-2
CHECKED BY: F. AMIN		
APPROVED BY: G. GOMEZ		
DATE: OCTOBER 2013	CITY OF SANTA CLARA	PAGE: 44

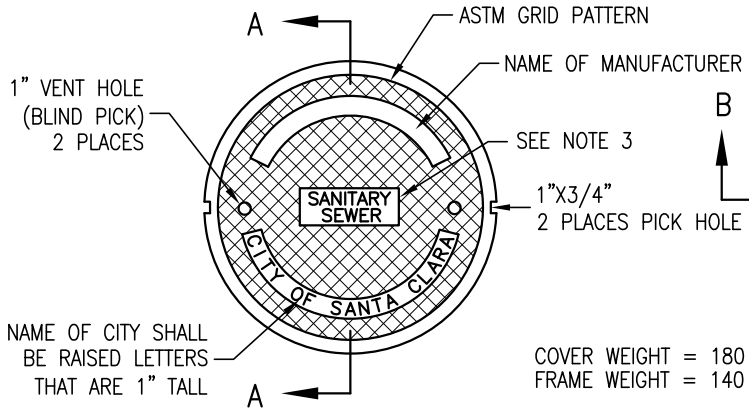

MANHOLE COVER – PLAN VIEW
NO SCALE

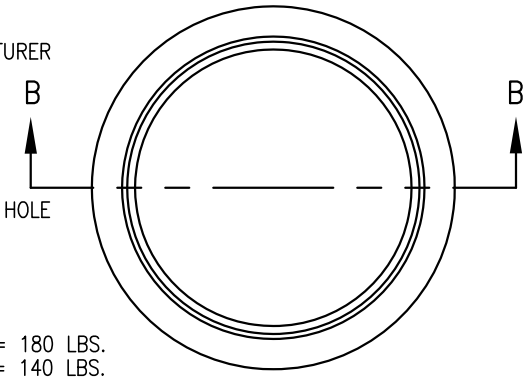

MANHOLE FRAME – PLAN VIEW
NO SCALE

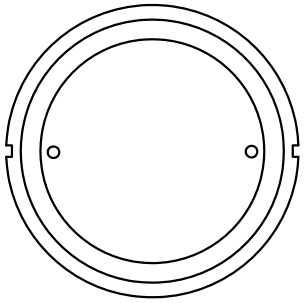

MANHOLE COVER – BOTTOM VIEW
NO SCALE

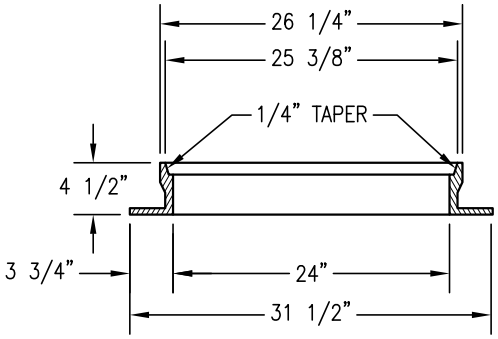

SECTION B–B
NO SCALE

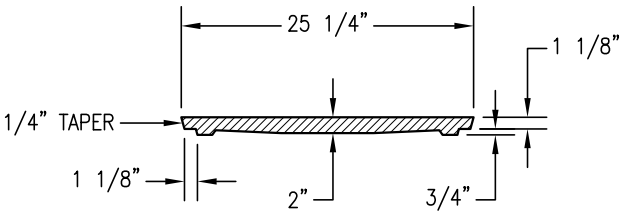

SECTION A–A
NO SCALE

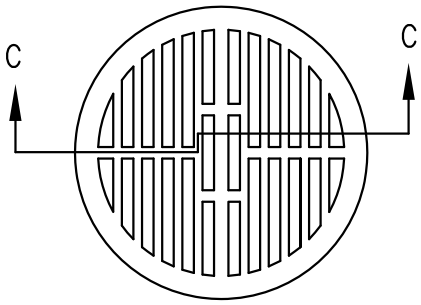

MANHOLE GRATE – PLAN VIEW
NO SCALE

NOTES:

1. ALL MATERIAL TO BE CAST IRON DIPPED IN ASPHALT PAINT.
2. FRAME, GRATE AND COVER SHALL BE SUITABLE FOR H–20 LOADING.
3. COVER SHALL HAVE EITHER "SANITARY SEWER" FOR SANITARY SEWERS OR "STORM DRAIN" FOR STORM DRAINS IN RAISED LETTERS THAT ARE 1–1/2" TALL.

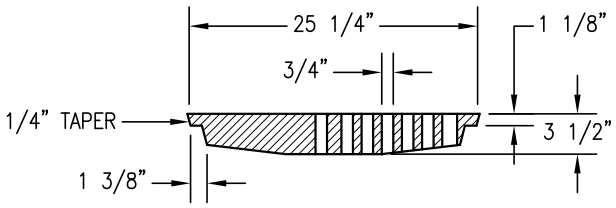

SECTION C–C
NO SCALE

DRAWN BY: K. TRAN	MANHOLE FRAME, COVER AND GRATE	DS-3
CHECKED BY: F. AMIN		
APPROVED BY: G. GOMEZ		
DATE: DECEMBER 2014	CITY OF SANTA CLARA	PAGE: 45

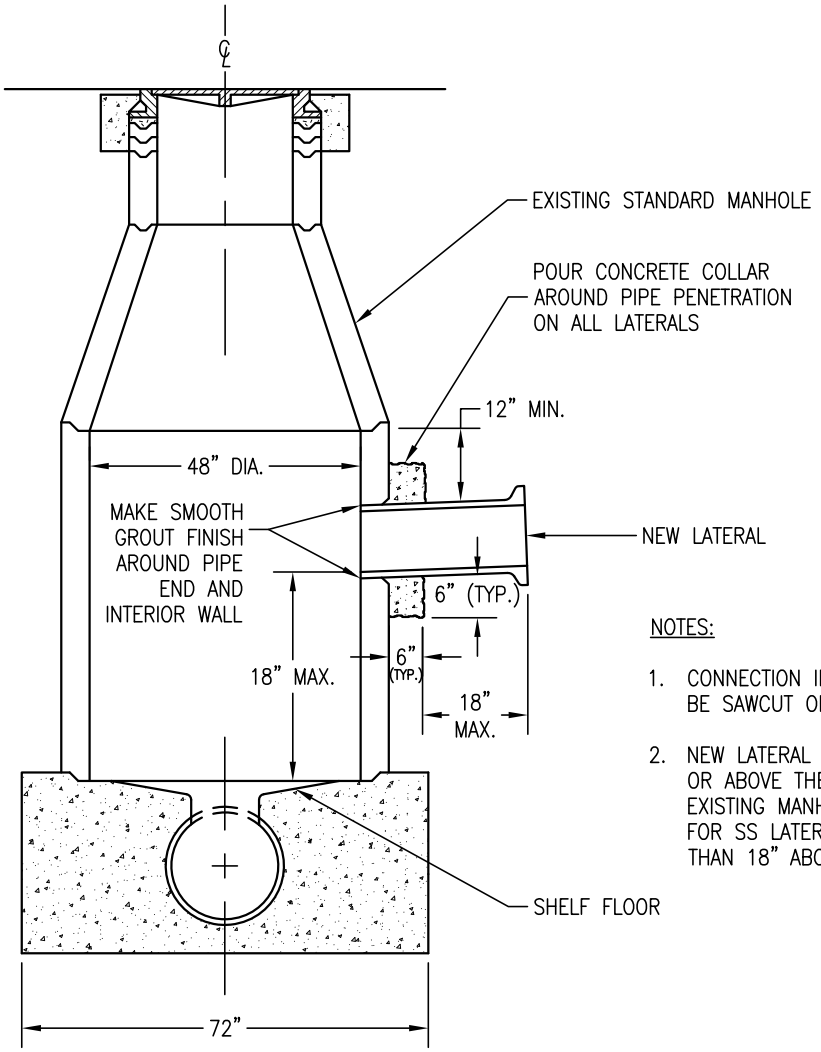

ELEVATION VIEW
NO SCALE

NOTES:

1. CONNECTION INTO MANHOLE BARREL SHALL BE SAWCUT OR CORE DRILLED.
2. NEW LATERAL MUST ENTER MANHOLE AT OR ABOVE THE SHELF FLOOR OF THE EXISTING MANHOLE. SEE DETAIL SS-4 FOR SS LATERAL CONNECTION GREATER THAN 18" ABOVE MANHOLE SHELF FLOOR.

DRAWN BY: K. TRAN	LATERAL CONNECTION TO EXISTING MANHOLE	DS-4
CHECKED BY: F. AMIN		
APPROVED BY: G. GOMEZ		
DATE: DECEMBER 2014	CITY OF SANTA CLARA	PAGE: 46

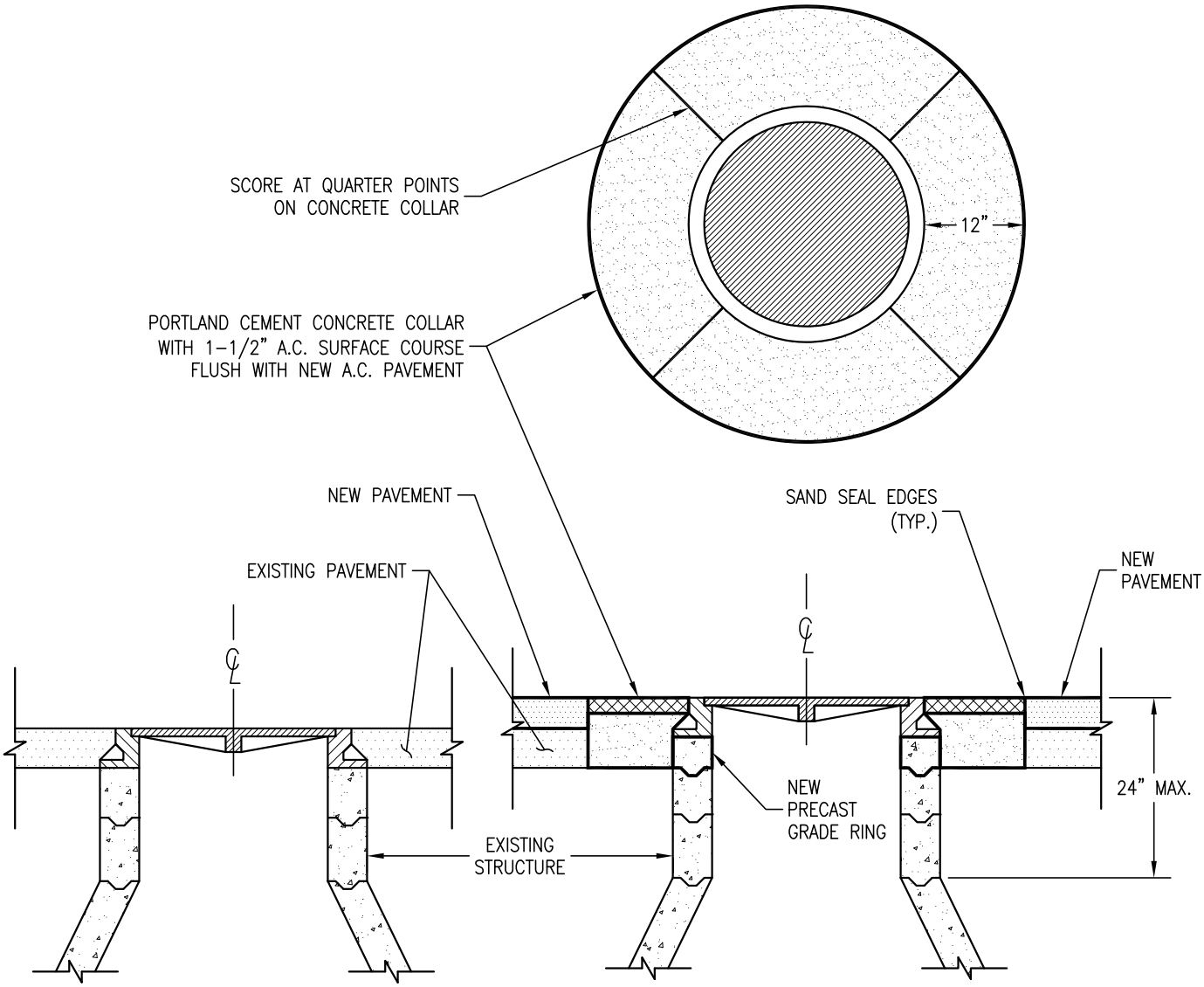

EXISTING MANHOLE
NO SCALE

RAISED MANHOLE
NO SCALE

NOTE:

EXISTING FRAME AND COVER TO BE USED
UNLESS OTHERWISE DIRECTED BY THE ENGINEER.

DRAWN BY: K. TRAN	MANHOLE RAISING	DS-5
CHECKED BY: F. AMIN		
APPROVED BY: G. GOMEZ		
DATE: OCTOBER 2013	CITY OF SANTA CLARA	PAGE: 47

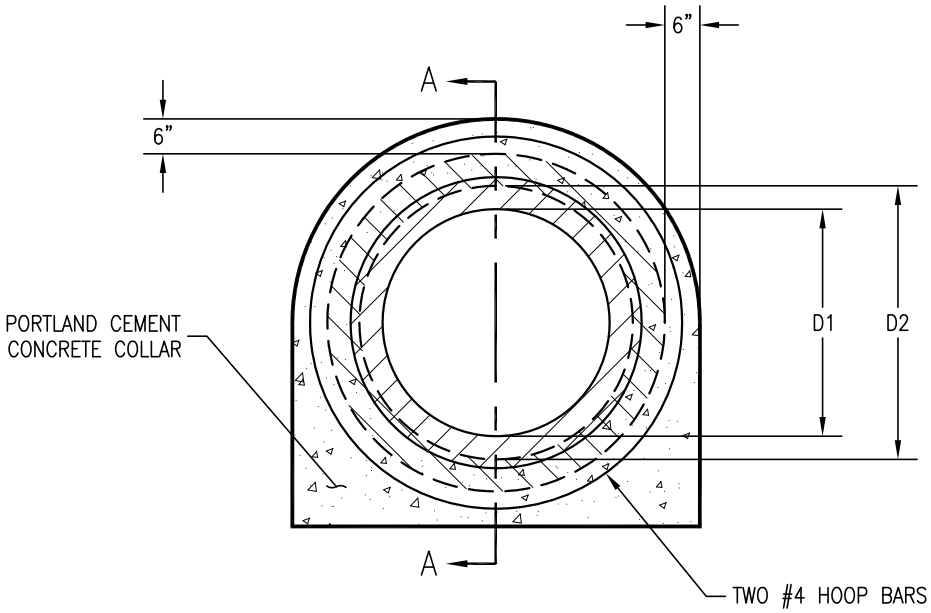

ELEVATION VIEW
NO SCALE

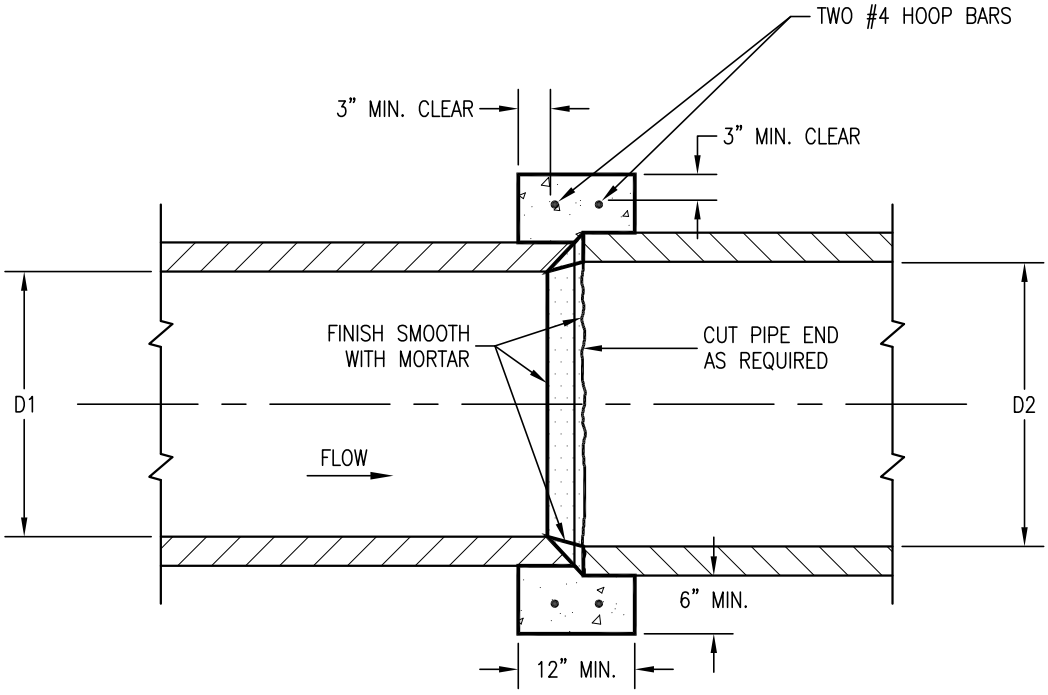

SECTION A–A
NO SCALE

NOTES:

1. PIPE COLLAR MAY BE USED ONLY WITH WRITTEN APPROVAL OF THE CITY ENGINEER.
2. PIPE COLLAR MAY BE USED IN JOINING PIPES WITH INCOMPATIBLE (NON–MATING) JOINTS, WHERE: D2 $\geq$ D1 AND D2 $\leq$ (D1 + 3").
3. PIPE COLLAR DOES NOT HAVE TO BE FINISHED IF COVERED, BUT MUST HAVE A MINIMUM OF 6" OF CONCRETE AROUND JOINT.

DRAWN BY: K. TRAN	CONCRETE COLLAR	DS-6
CHECKED BY: F. AMIN		
APPROVED BY: G. GOMEZ		
DATE: OCTOBER 2013	CITY OF SANTA CLARA	PAGE: 48

Department of Public Works
City of Santa Clara, CA

STANDARD DETAILS

TRAFFIC SECTION

DETAILS TR-1 TO TR-8

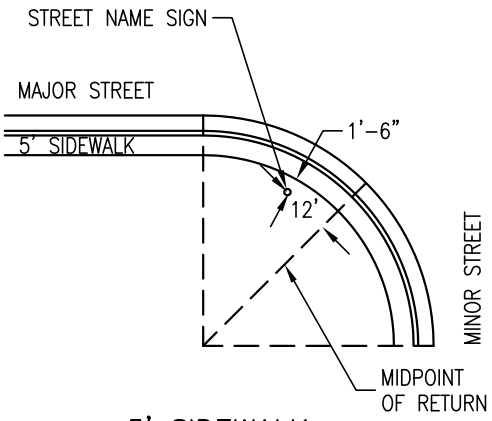

5' SIDEWALK

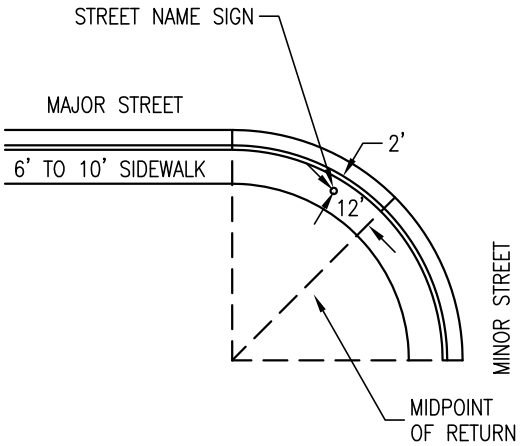

6' TO 10' SIDEWALK

STREET NAME SIGN LOCATION DETAILS

NO SCALE

NOTES:

1. TWO STREET NAME SIGNS LOCATED DIAGONALLY ACROSS FROM EACH OTHER ARE REQUIRED WHERE ONE OF THE TWO INTERSECTING STREETS' WIDTH (CURB TO CURB) IS 64' OR MORE.
2. ONLY ONE STREET NAME SIGN IS REQUIRED IF BOTH INTERSECTING STREETS' WIDTHS (CURB TO CURB) ARE LESS THAN 64'.
3. PRIVATE STREET NAME SIGN SHALL BE WHITE LETTERING ON BROWN BACKGROUND AND SHALL BE PLACED OUTSIDE PUBLIC ROW.

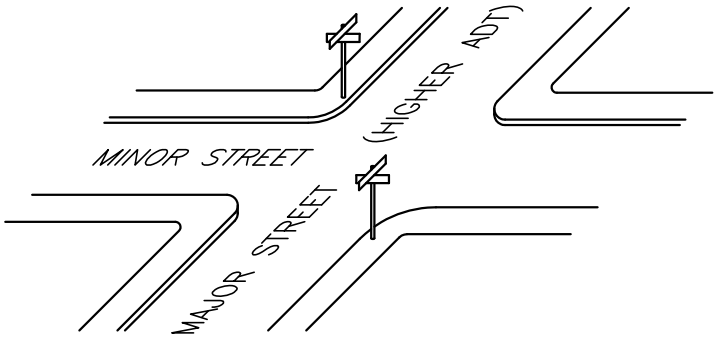

TYPICAL STREET NAME SIGN LOCATIONS

NO SCALE

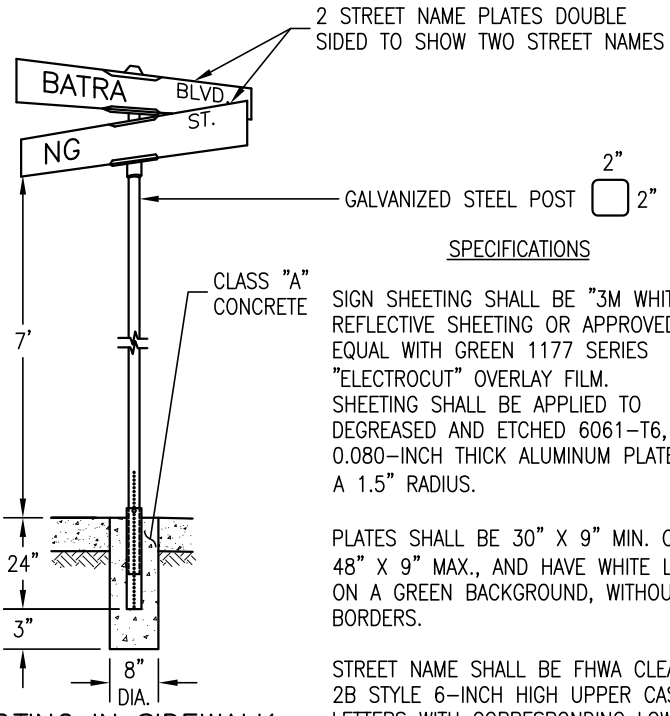

FOOTING IN SIDEWALK

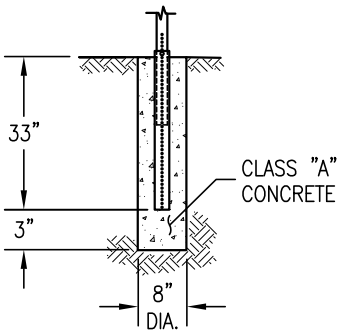

FOOTING IN DIRT

SPECIFICATIONS

SIGN SHEETING SHALL BE "3M WHITE HIP" REFLECTIVE SHEETING OR APPROVED EQUAL WITH GREEN 1177 SERIES "ELECTROCUT" OVERLAY FILM. SHEETING SHALL BE APPLIED TO DEGREASED AND ETCHED 6061-T6, 0.080-INCH THICK ALUMINUM PLATE WITH A 1.5" RADIUS.

PLATES SHALL BE 30" X 9" MIN. OR 48" X 9" MAX., AND HAVE WHITE LETTERS ON A GREEN BACKGROUND, WITHOUT BORDERS.

STREET NAME SHALL BE FHWA CLEARVIEW 2B STYLE 6-INCH HIGH UPPER CASE LETTERS WITH CORRESPONDING LOWER CASE LETTERS. 2.5-INCH LETTERS SHALL BE USED FOR "AVE., BLVD., CT., DR., PL., RD., ST., LN." "WAY" SHALL NOT BE ABBREVIATED.

ASSEMBLY HARDWARE SHALL BE "WESTERN HIGHWAY PRODUCTS" (WHP) NO. (812F/ 12" FOR FLAT BLADES) OR NO. (812F-90% CROSSPIECE FOR FLAT BLADES) OR APPROVED EQUAL.

2" X 2" GALVANIZED STEEL POST SHALL BE INSTALLED WITH WHP "ANCHOR-MATE" SIGN POST SUPPORT ANCHOR OR APPROVED EQUAL.

STREET NAME SIGN

NO SCALE

THE CITY OF SANTA CLARA CALIFORNIA The Mission City INCORPORATED 1852	DRAWN BY: K. TRAN	STREET NAME SIGN AND LOCATION	TR-1
	CHECKED BY: P. BHATIA		
	APPROVED BY: D. NG		
	DATE: OCTOBER 2015	CITY OF SANTA CLARA	PAGE: 49

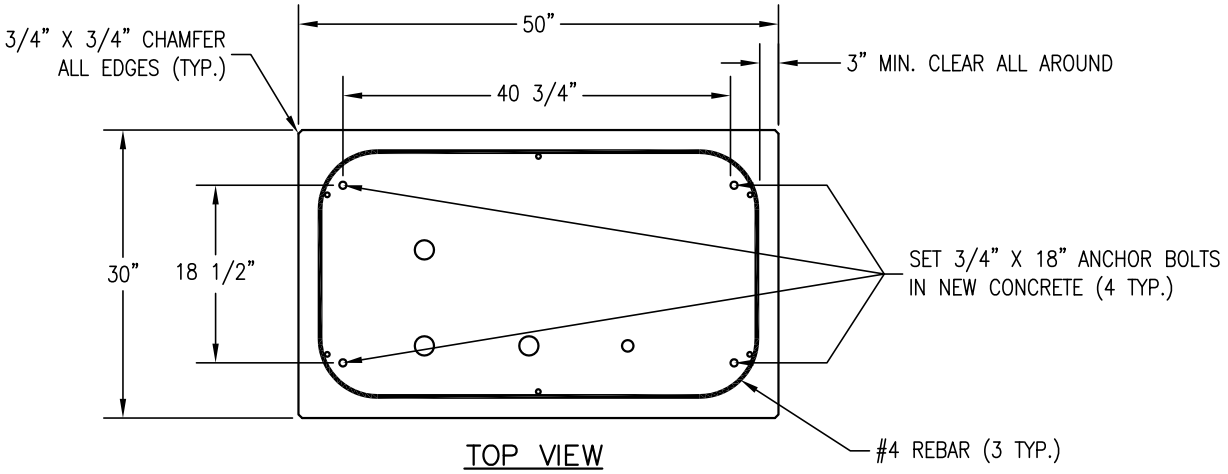

TOP VIEW
NO SCALE

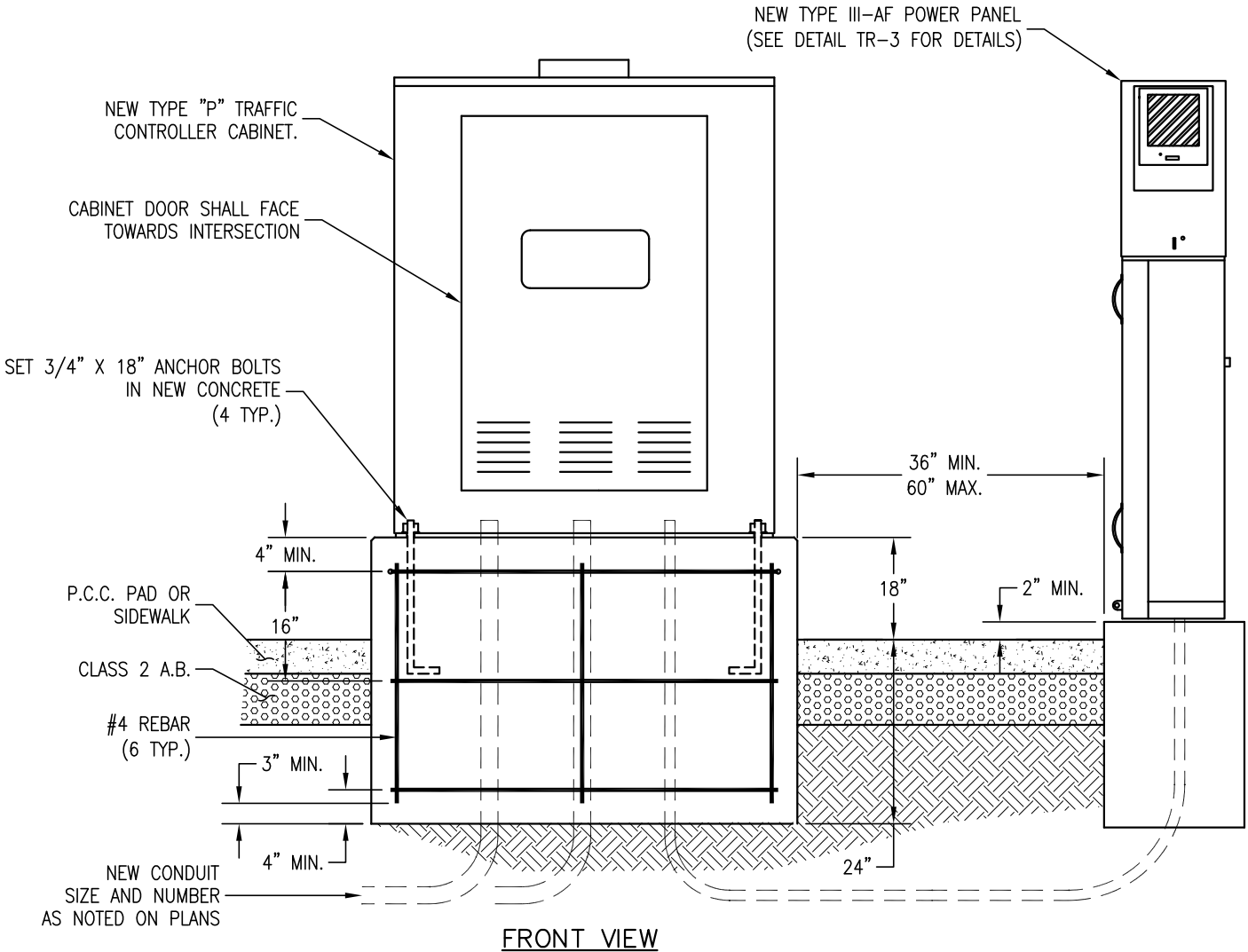

FRONT VIEW
NO SCALE

NOTE: GROUND ROD TO BE IN PULL BOX NEXT TO CABINET.

DRAWN BY: K. TRAN	TRAFFIC SIGNAL CONTROLLER CABINET	TR-2
CHECKED BY: B. TRAN		
APPROVED BY: D. NG		
DATE: OCTOBER 2013	CITY OF SANTA CLARA	DATE: 50

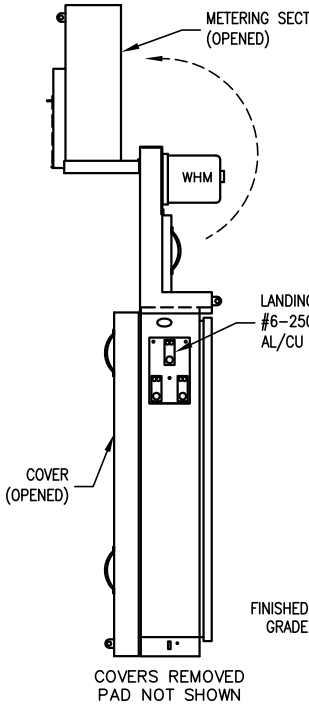

LEFT SIDE
NO SCALE

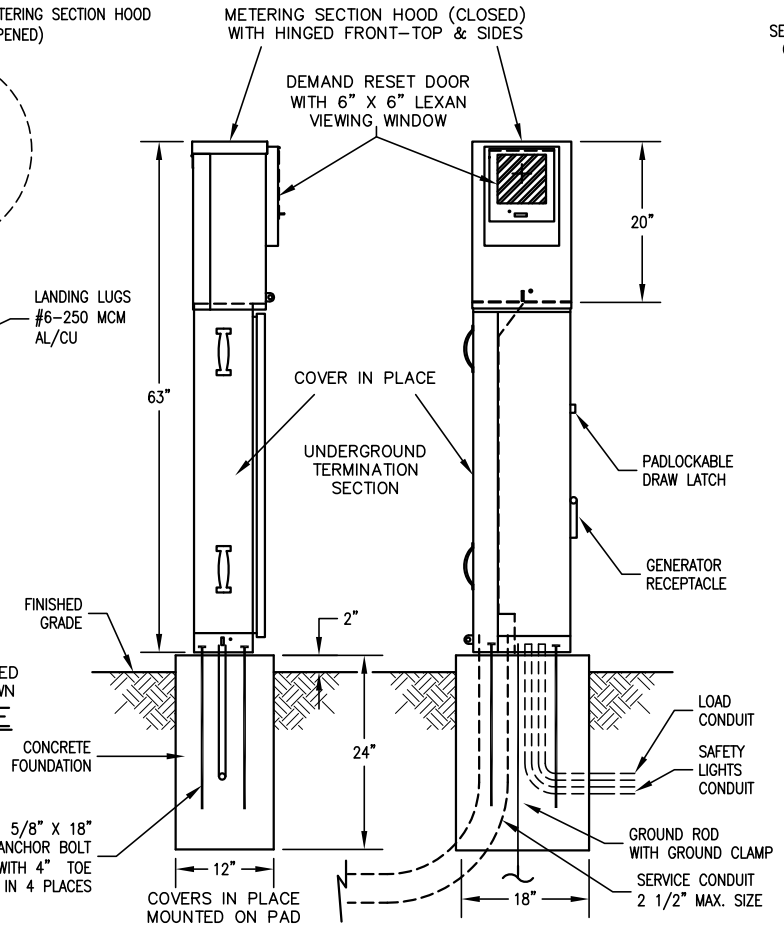

LEFT SIDE
NO SCALE

FRONT VIEW
NO SCALE

SEE ENCLOSURE CONSTRUCTION NOTE 10

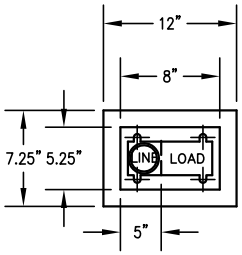

BASE PLAN
NO SCALE

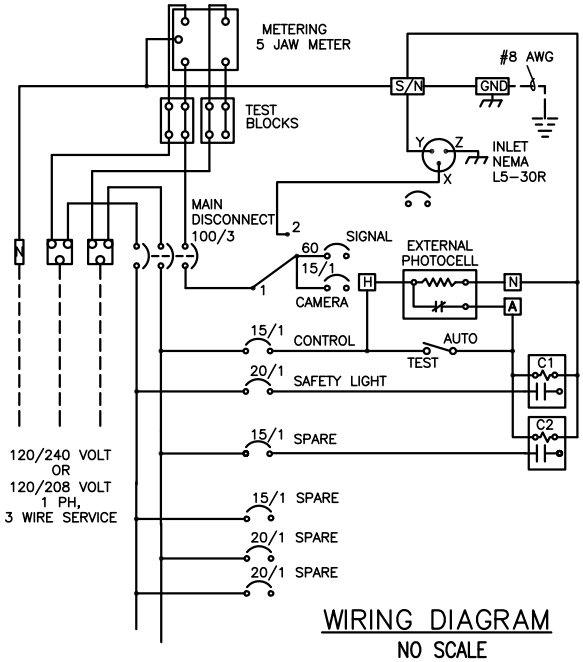

WIRING DIAGRAM
NO SCALE

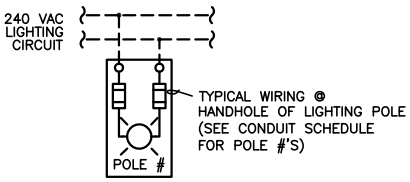

ENCLOSURE CONSTRUCTION NOTES:

1. FABRICATED FROM 1/8" ALUMINUM SHEET STOCK ELECTRICALLY WELDED AND REINFORCED WHERE REQUIRED.
2. CONSTRUCTION WILL BE NEMA 3R AND 12, RAINTIGHT AND DUST TIGHT.
3. ALL NUTS, BOLTS, SCREWS AND HINGES SHALL BE STAINLESS STEEL.
4. NUTS, BOLTS & SCREWS SHALL NOT BE VISIBLE FROM OUTSIDE OF ENCLOSURE.
5. PHENOLIC NAMEPLATES SHALL BE PROVIDED AS REQUIRED.
6. CONTROL WIRING SHALL BE MARKED AT BOTH ENDS BY PERMANENT WIRE MARKERS.
7. A PLASTIC COVERED WIRING DIAGRAM SHALL BE ATTACHED TO THE INSIDE OF THE FRONT DOOR.
8. ENCLOSURE WILL BE FACTORY WIRED AND CONFORM TO REQUIRED NEMA STANDARD.
9. FINISH: ANODIZED ALUMINUM
10. PANEL SHALL BE TESCO TYPE III AF OR APPROVED EQUAL.

DRAWN BY: K. TRAN	TRAFFIC SIGNAL POWER PANEL		TR-3
CHECKED BY: B. TRAN			
APPROVED BY: D. NG			
DATE: OCTOBER 2013	CITY OF SANTA CLARA		PAGE: 51

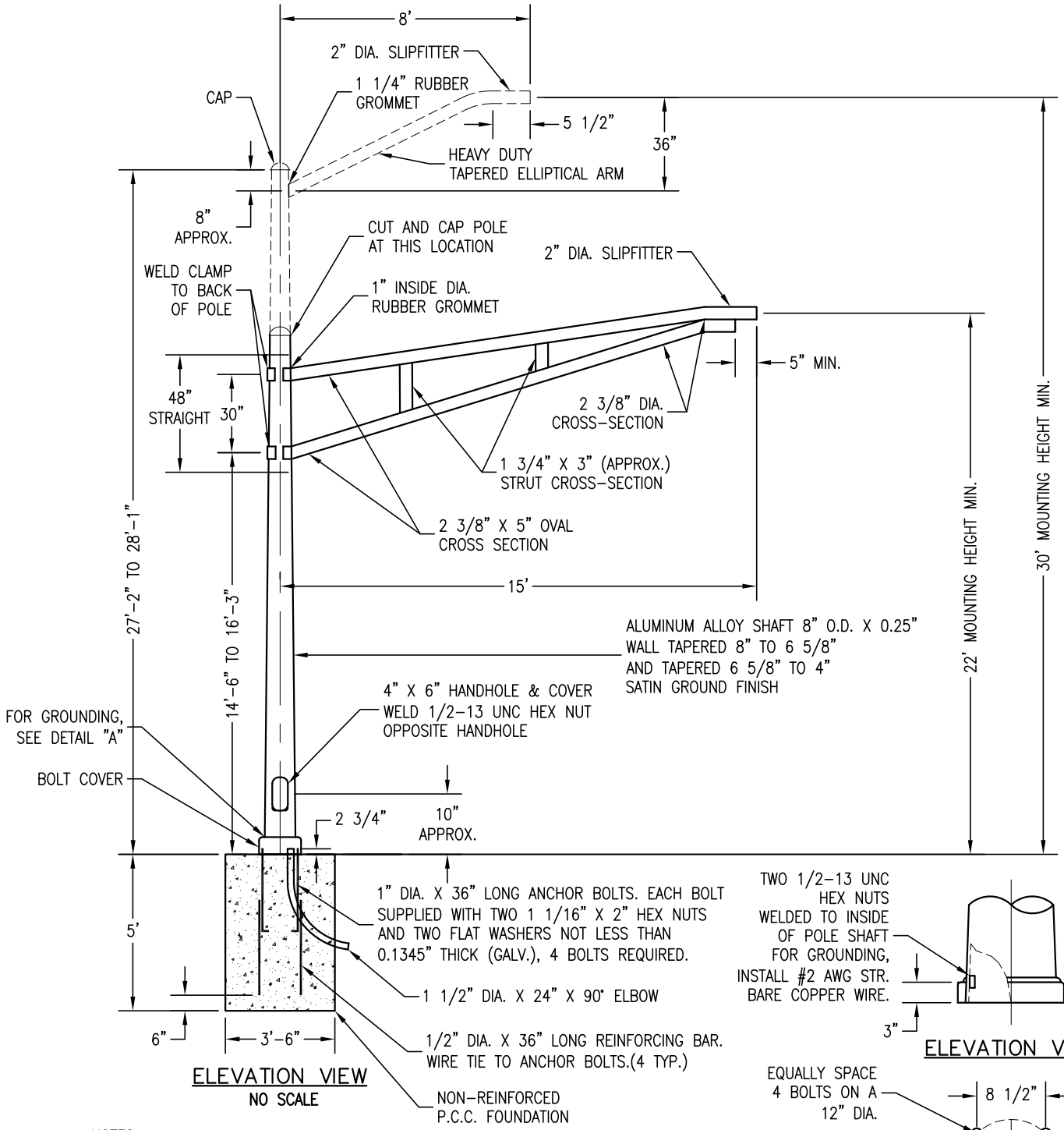

ELEVATION VIEW
NO SCALE

ELEVATION VIEW

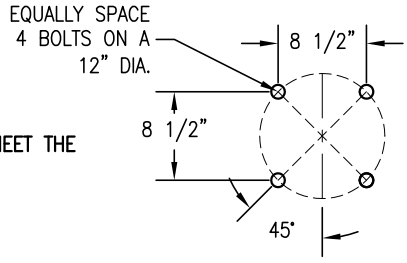

BOTTOM VIEW

DETAIL "A"
NO SCALE

NOTES:

1. **THIS DETAIL IS ONLY FOR MAINTENANCE REFERENCE. NEW TRAFFIC SIGNAL POLES SHALL MEET THE LATEST CALTRANS STANDARDS.**
2. THE POLE SHALL BE FURNISHED WITH GROUNDING CONNECTORS, ANCHOR BOLTS, NUTS, WASHERS, AND BOLT COVER.
3. IF FOUNDATION IS PLACED IN SIDEWALK, PLACE THE FOUNDATION TOP WITHIN 4" OF SIDEWALK SURFACE. REMAINDER OF FOUNDATION SHALL BE PLACED WHEN SIDEWALK IS INSTALLED.
4. IF FOUNDATION IS PLACED AT BACK OF SIDEWALK OR IN DIRT, FINISH TOP 6" TO 42" X 42" SQUARE.

DRAWN BY: K. TRAN	TYPE III POLE	TR-4
CHECKED BY: B. TRAN		
APPROVED BY: D. NG		
DATE: OCTOBER 2013	CITY OF SANTA CLARA	PAGE: 52

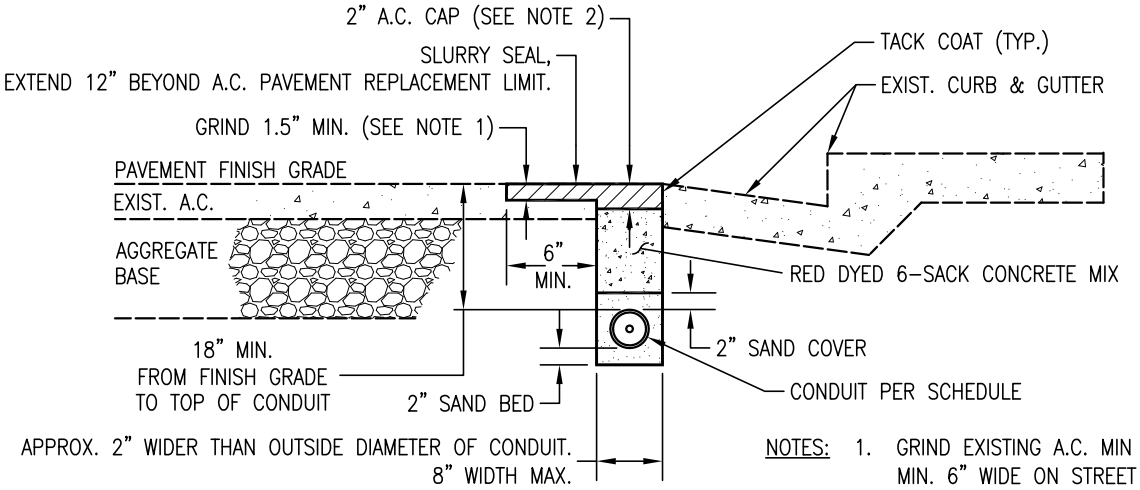

NOTES:
1. GRIND EXISTING A.C. MIN 1.5" DEEP BY MIN. 6" WIDE ON STREET SIDE OF TRENCH JUST PRIOR TO PLACING FINAL A.C. PAVEMENT.
2. FINAL A.C. PAVEMENT SHALL BE PLACED WITHIN 5 WORKING DAYS OF EXCAVATION.

TRENCH AT LIP OF GUTTER
NO SCALE

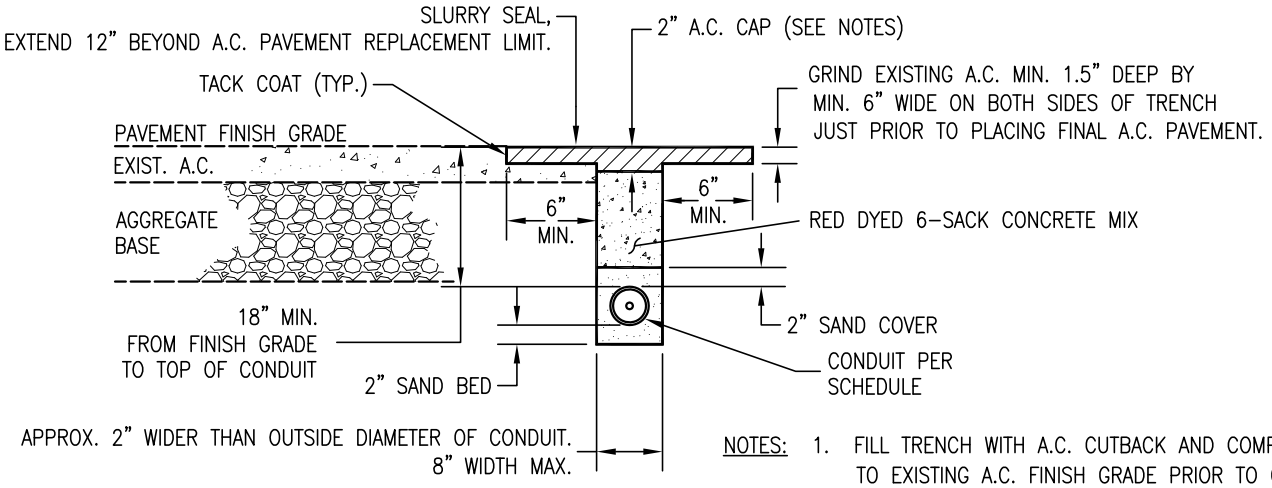

NOTES:
1. FILL TRENCH WITH A.C. CUTBACK AND COMPACTED TO EXISTING A.C. FINISH GRADE PRIOR TO OPENING THE LANE TO TRAFFIC.
2. FINAL A.C. PAVEMENT SHALL BE PLACED WITHIN 48 HOURS OF EXCAVATION.

TRENCH IN ROADWAY
NO SCALE

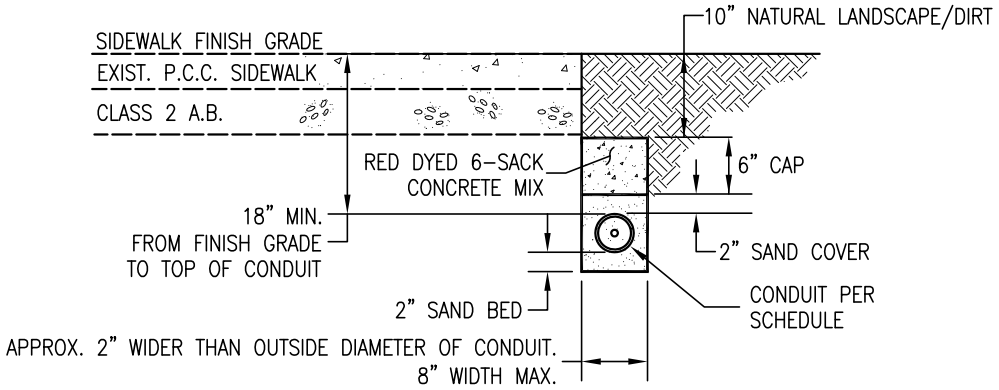

TRENCH AT BACK OF SIDEWALK
NO SCALE

DRAWN BY: K. TRAN	TRAFFIC SIGNAL TRENCH DETAILS	TR-5
CHECKED BY: B. TRAN		
APPROVED BY: D. NG		
DATE: OCTOBER 2013	CITY OF SANTA CLARA	PAGE: 53

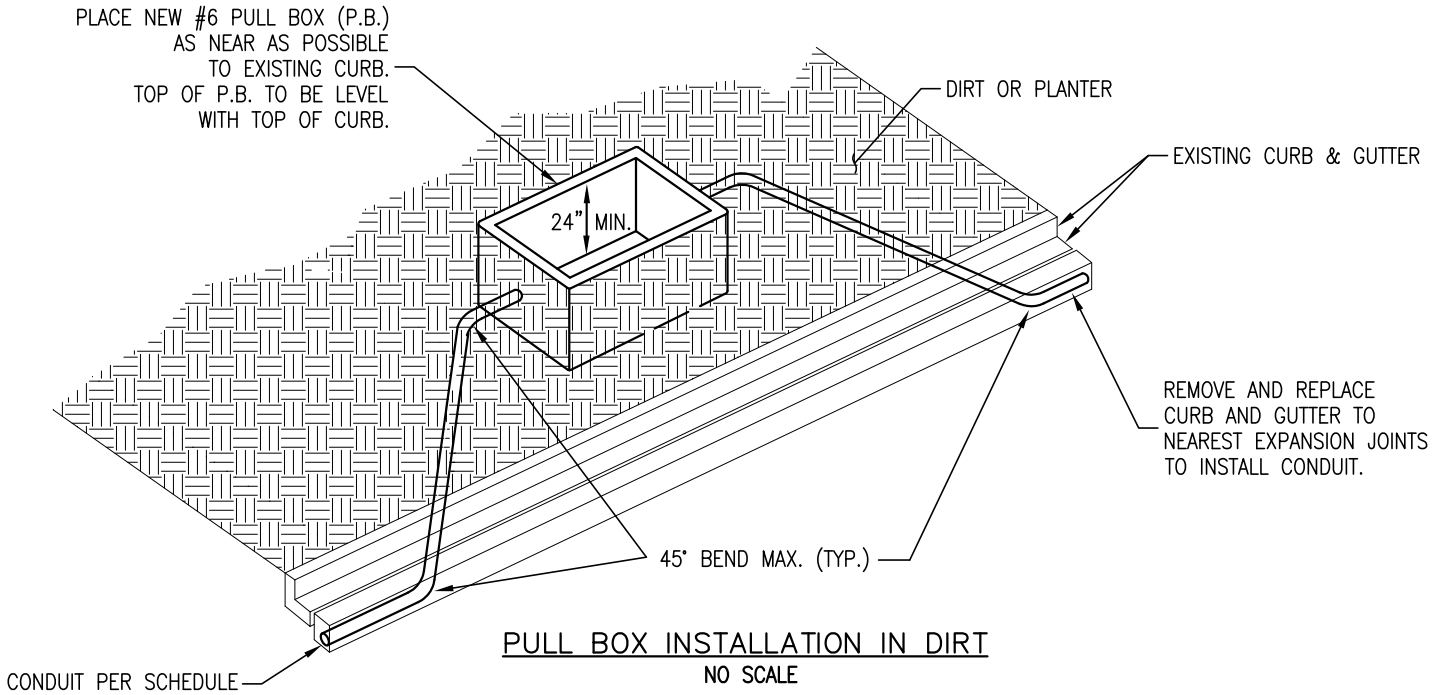

PULL BOX INSTALLATION IN DIRT

NO SCALE

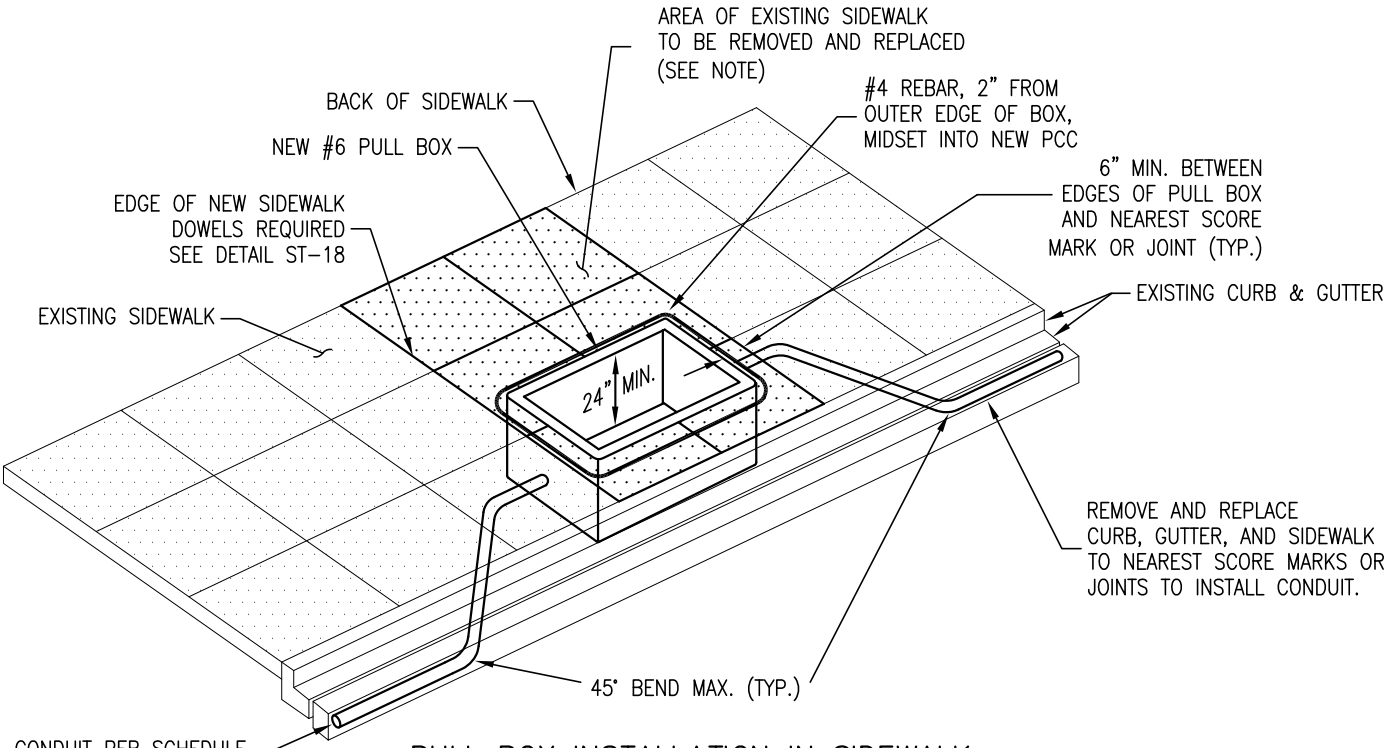

PULL BOX INSTALLATION IN SIDEWALK

NO SCALE

NOTE: IF SIDEWALK IS GREATER THAN 9', REMOVE AND REPLACE TO MIDDLE SCORE MARK.

DRAWN BY: K. TRAN	TRAFFIC SIGNAL PULL BOX	TR-6
CHECKED BY: B. TRAN		
APPROVED BY: D. NG		
DATE: DECEMBER 2014	CITY OF SANTA CLARA	PAGE: 54

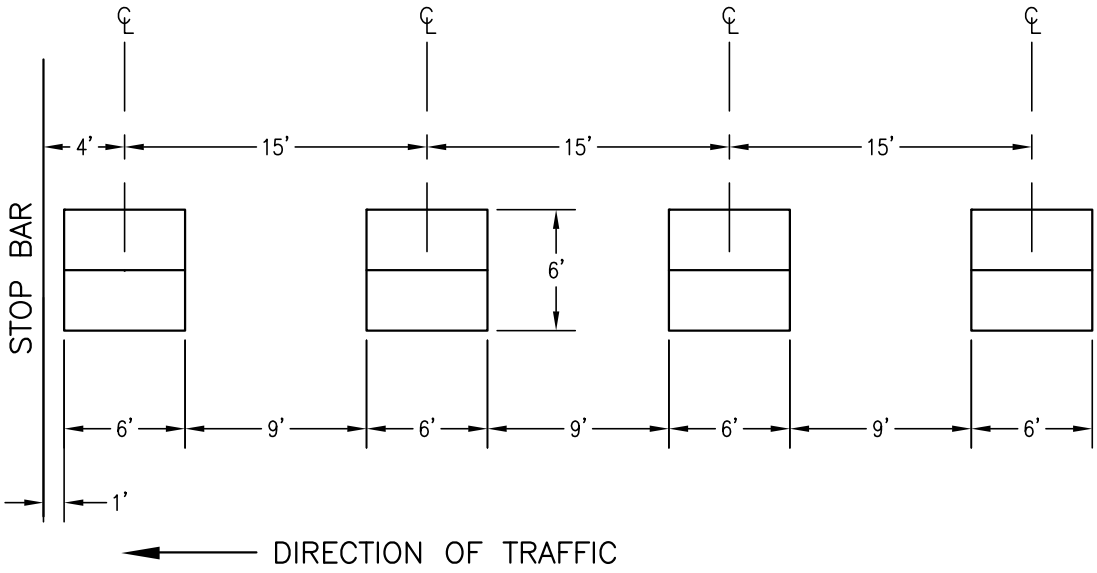

NOTES:

1. FOUR (4) LOOPS FOR LEFT AND RIGHT TURN LANES. THREE (3) LOOPS FOR STRAIGHT THROUGH LANES.

2. LOOPS TO BE CUT IN A 6'x6' QUAD CONFIGURATION. LOOP MARKS SHALL BE VERIFIED BY CITY TRAFFIC STAFF (72 HOURS ADVANCE NOTIFICATION REQUIRED) UNLESS OTHERWISE NOTED.

3. DETECTOR LOOPS SHALL BE TYPE "Q". DETECTOR LOOP WIRE SHALL BE TYPE 1. LEAD IN CABLE SHALL CONFORM TO TYPE B. LOOP WIRING IS TO BE WRAPPED IN A 3-6-3 CONFIGURATION.

4. EACH LANE SHALL HAVE ITS INDIVIDUAL LOOP CONNECTED IN SERIES, AND ITS WIRING SHALL BE BROUGHT INTO PROPER PULLBOX FOR CONNECTION TO TYPE B DETECTOR LEAD IN CABLE (DLC). LOOP WIRING IN STREET SHALL ENTER A (G5 BOX) DETECTOR HANDHOLE AT THE LIP OF GUTTER.

5. SEALANT SHALL BE HOT MELT RUBBERIZED ASPHALT. FINISHED PRODUCT MUST BE AT A MINIMUM STREET LEVEL OR ABOVE.

6. ANY TRAFFIC LOOP WIRE CONNECTION(S) TO BE LAID DOWN IN SIGNAL CABINET SHALL BE SOLDERED. DLC SHIELD CONDUCTORS ARE NOT TO BE BONDED TO THE GROUND, BUT WRAPPED AROUND AND SECURED TO RESPECTIVE OWNER. THEY ARE NOT TO BE SHORTER THAN SIX INCHES (6").

7. ACCEPTABLE TESTING RESULTS FOR EACH INDIVIDUAL LOOP PAIR SHALL BE 126 MICRO-HENRIES INDUCTANCE AND INFINITE MEG-OHMS TO GROUND. NO LOOP WIRING SHALL BE CONNECTED UNTIL TESTED AND APPROVED BY SILICON VALLEY POWER STAFF (72 HOURS ADVANCE NOTIFICATION REQUIRED).

8. SEE STATE OF CALIFORNIA, DEPARTMENT OF TRANSPORTATION (CALTRANS) STANDARD PLANS, PAGES ES-5A AND ES-5B, FOR INSTALLATION DETAILS.

DRAWN BY: K. TRAN	TRAFFIC SIGNAL DETECTOR LOOPS SPACING	TR-7
CHECKED BY: B. TRAN		
APPROVED BY: D. NG		
DATE: DECEMBER 2014	CITY OF SANTA CLARA	PAGE: 55

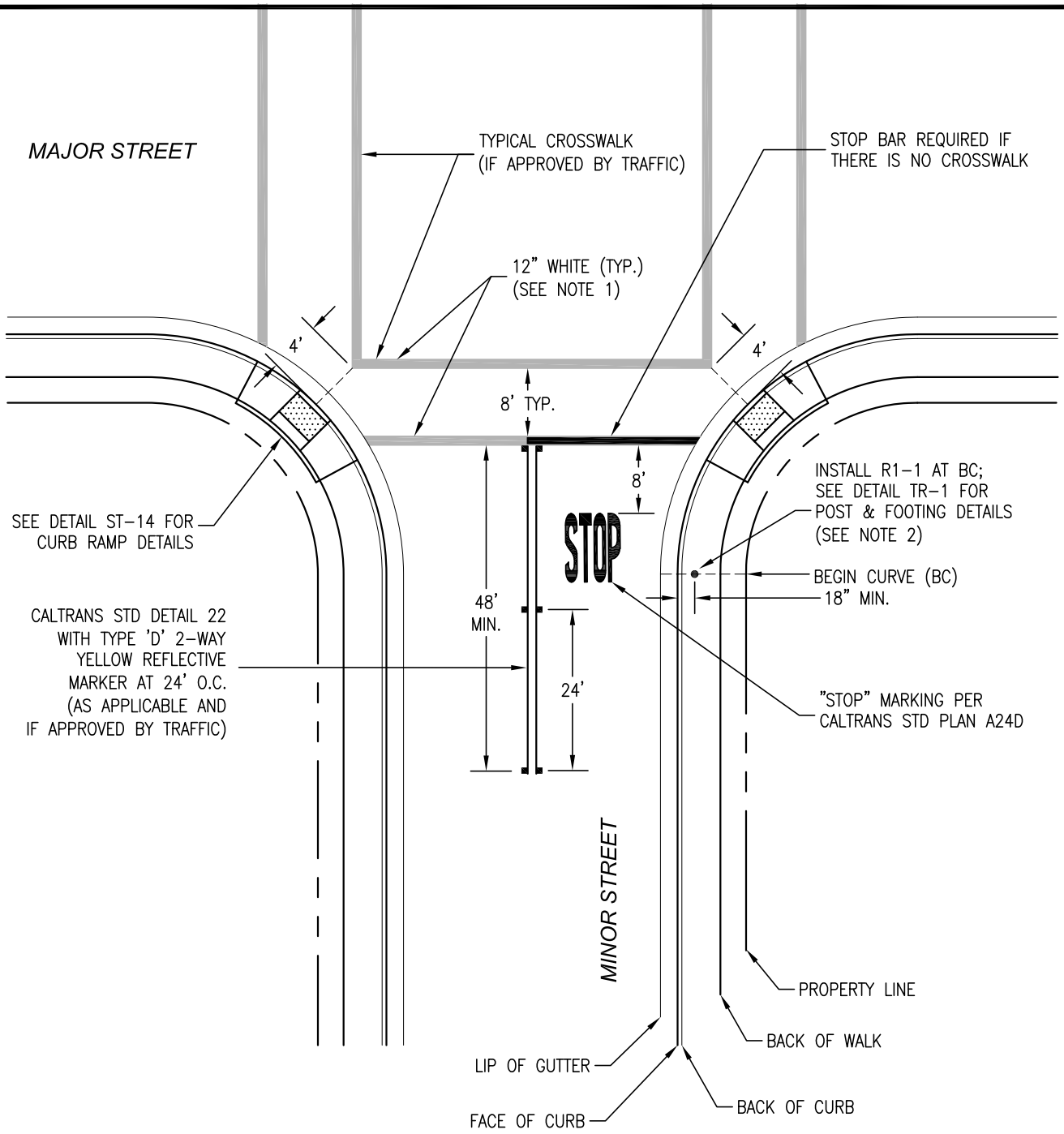

NOTES:

1. ALL PAVEMENT MARKINGS SHALL BE THERMOPLASTIC OR PRE-FORMED THERMOPLASTIC PER SPECIFICATIONS.

2. INSTALL R1-1 MINIMUM OF 18" FROM FACE OF CURB, 7' FROM GROUND TO BOTTOM OF SIGN. EDGE OF INSTALLED R1-1 SHALL BE 4" BEHIND FACE OF CURB (OFFSET AS NEEDED).

3. NO PERMANENT MARKINGS OR SIGNS SHALL BE PLACED UNTIL THE CITY TRAFFIC ENGINEER OR HIS REPRESENTATIVE APPROVES THE CAT-TRACKING OR PRE-MARKINGS IN THE FIELD.

DRAWN BY: K. TRAN	TYPICAL STOP INTERSECTION	TR-8
CHECKED BY: B. TRAN		
APPROVED BY: D. NG		
DATE: OCTOBER 2013	CITY OF SANTA CLARA	PAGE: 56

Department of Public Works
City of Santa Clara, CA

STANDARD DETAILS

LANDSCAPE SECTION

DETAILS LS-1 TO LS-22

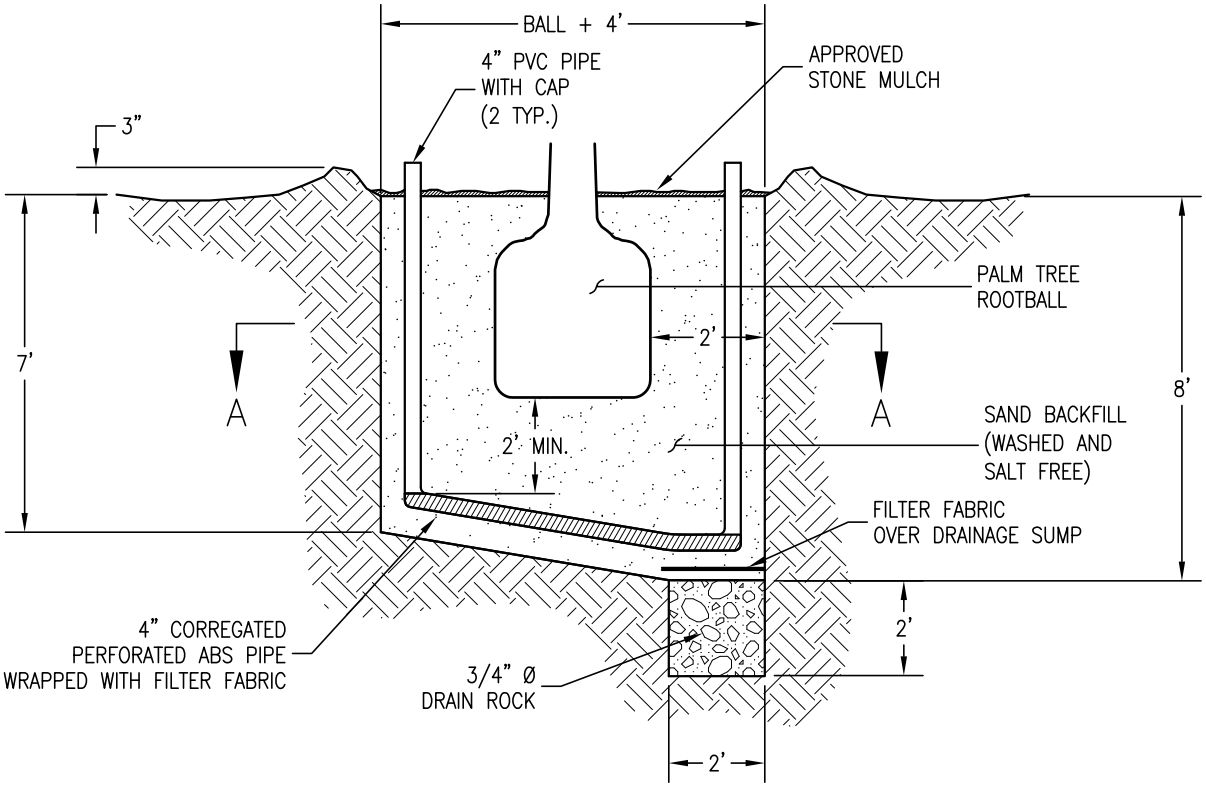

ELEVATION VIEW
NO SCALE

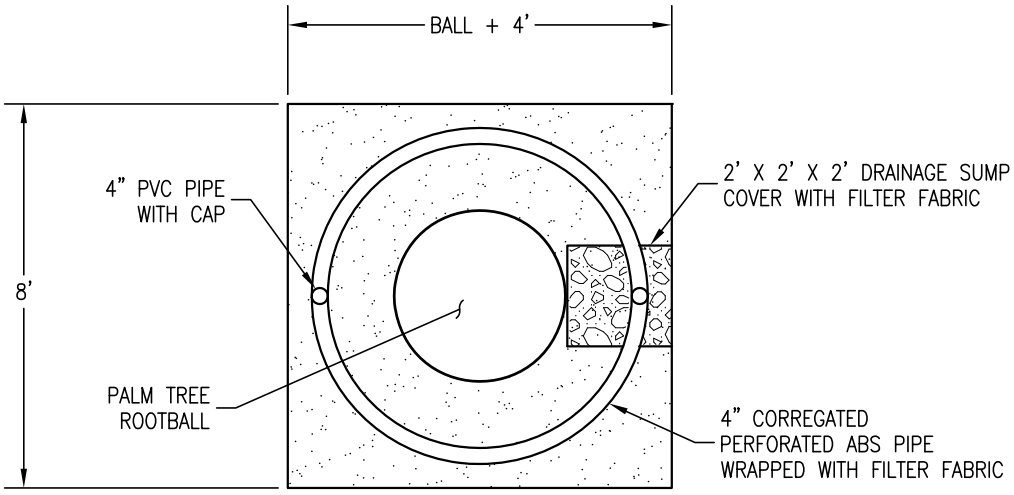

SECTION A–A
NO SCALE

DRAWN BY: K. TRAN	PALM TREE PLANTING	LS-1
CHECKED BY: C. QUANZ		
APPROVED BY: G. GOMEZ		
DATE: OCTOBER 2013	CITY OF SANTA CLARA	PAGE: 57

* ALL TREES EXCEPT PALMS

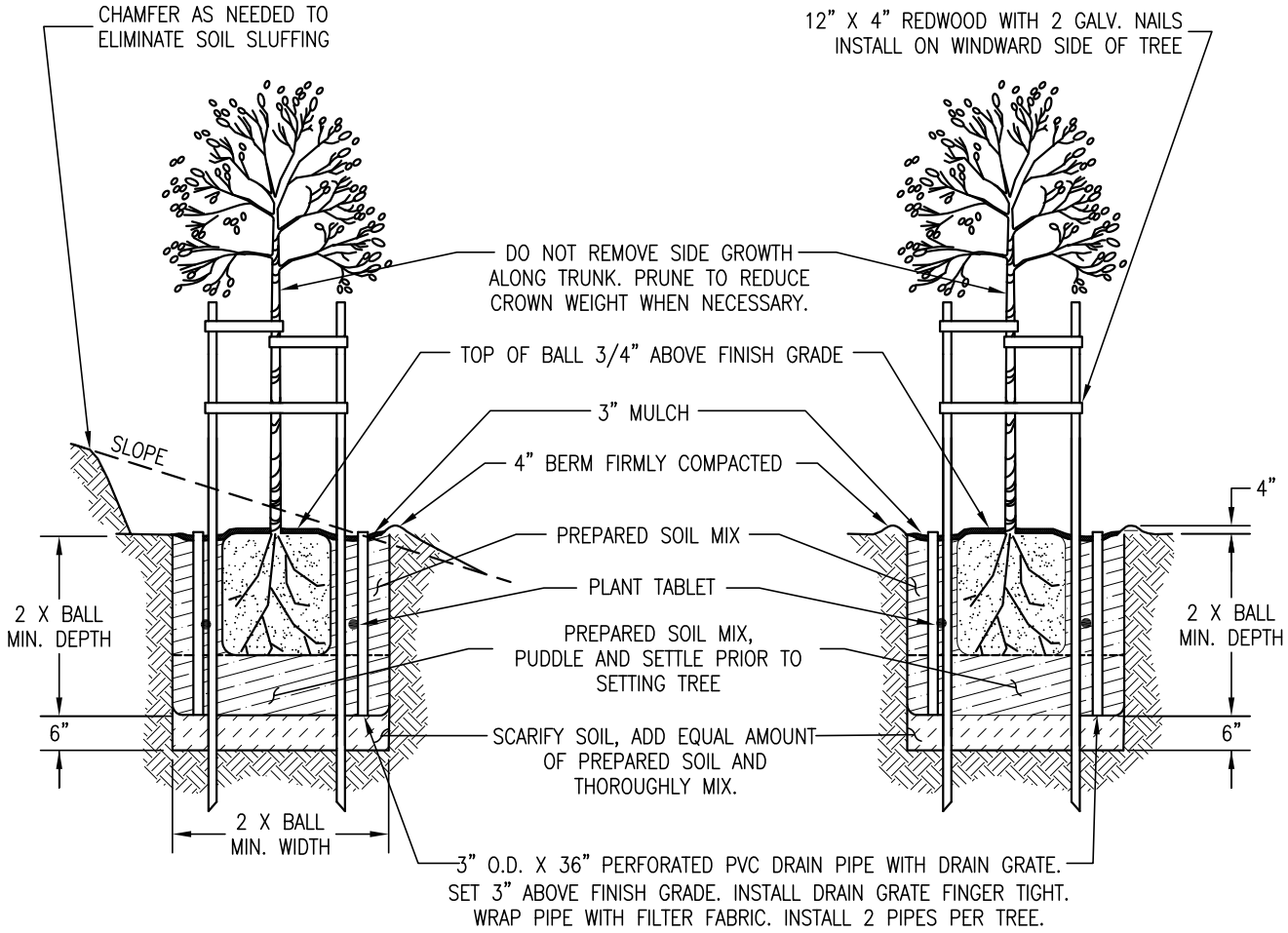

SLOPE SURFACE ELEVATION VIEW
NO SCALE

LEVEL SURFACE ELEVATION VIEW
NO SCALE

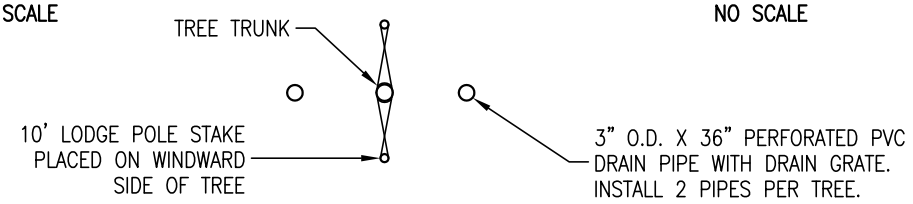

NOTES:

1. CONTACT UNDERGROUND SERVICE ALERT (USA) AT (800) 642–2444 AT LEAST 5 DAYS PRIOR TO BEGINNING EXCAVATION WORK TO LOCATE EXISTING UTILITIES.
2. BUILD SOIL BERM MIN. 4" HIGH AND 3' FROM TREE TRUNK IN PLANTER STRIP. PROVIDE LOAM TOPSOIL NEEDED TO FORM BERM AND FILL HOLES.
3. SOIL, CONCRETE AND OTHER MATERIALS SPILLED ON STREET, SIDEWALK, AND PLANTING AREA SHALL BE CLEANED UP IMMEDIATELY BY CONTRACTOR.
4. IF TREE PLANTING IS DELAYED AFTER TREE WELLS ARE CONSTRUCTED, HOLES WILL BE FILLED IN WITH SOIL UNTIL TREES ARE AVAILABLE.
5. TREE PLANTING PIT DRAINAGE TEST TO BE: AUGER HOLE 18" DEEP 6" DIA., FILL WITH WATER, LET DRAIN, FILL WITH WATER AGAIN AND HAVE CITY ARBORIST ON SITE TO REVIEW DRAINAGE AND MAKE ANY NECESSARY RECOMMENDATIONS AT THAT TIME.

DRAWN BY: K. TRAN	TREE PLANTING	LS-2
CHECKED BY: C. QUANZ		
APPROVED BY: G. GOMEZ		
DATE: OCTOBER 2013	CITY OF SANTA CLARA	PAGE: 58

* ALL TREES EXCEPT PALMS

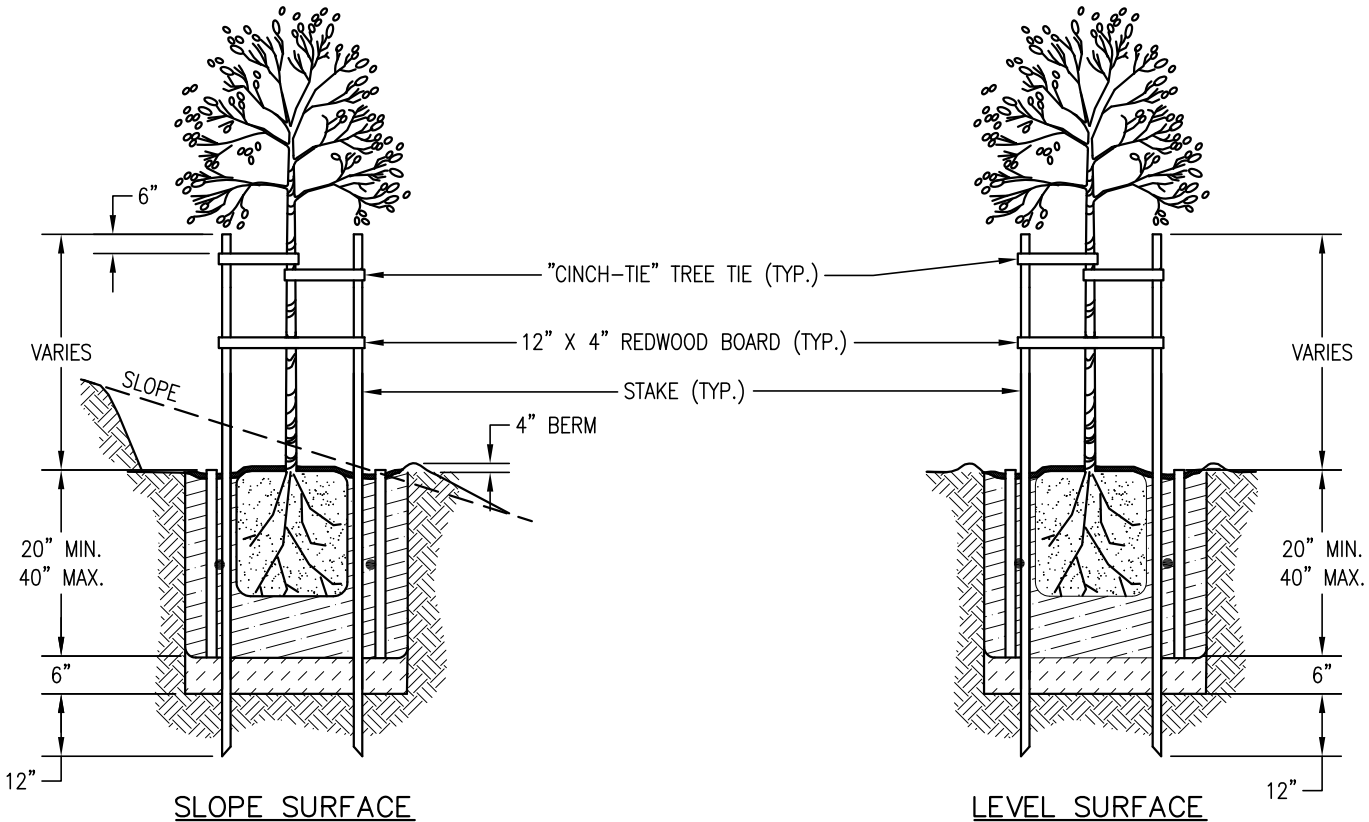

SLOPE SURFACE
ELEVATION VIEW
NO SCALE

LEVEL SURFACE
ELEVATION VIEW
NO SCALE

NOTES:

1. USE 2 STAKES AND 2 "CINCH-TIE" TREE TIES.
2. TIE TREE TRUNK 6" ABOVE BENDING MOMENT OF TREE.
3. TIE SHOULD ALLOW TRUNK FLEXIBILITY BUT NOT ALLOW THE STAKE TO RUB AGAINST THE TRUNK.
4. CUT STAKES 6" ABOVE TIES.
5. FOR SINGLE STAKE TREES, PLACE STAKE ON WINDWARD SIDE OF TREE.

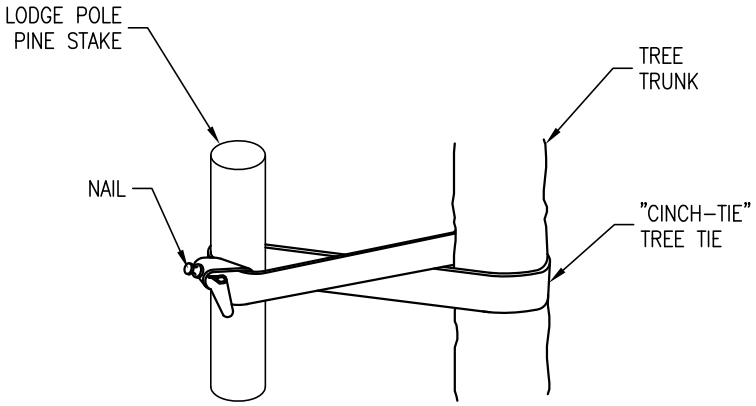

"CINCH-TIE"
TREE TIE DETAIL
NO SCALE

DRAWN BY: K. TRAN	TREE STAKING	LS-3
CHECKED BY: C. QUANZ		
APPROVED BY: G. GOMEZ		
DATE: OCTOBER 2013	CITY OF SANTA CLARA	PAGE: 59

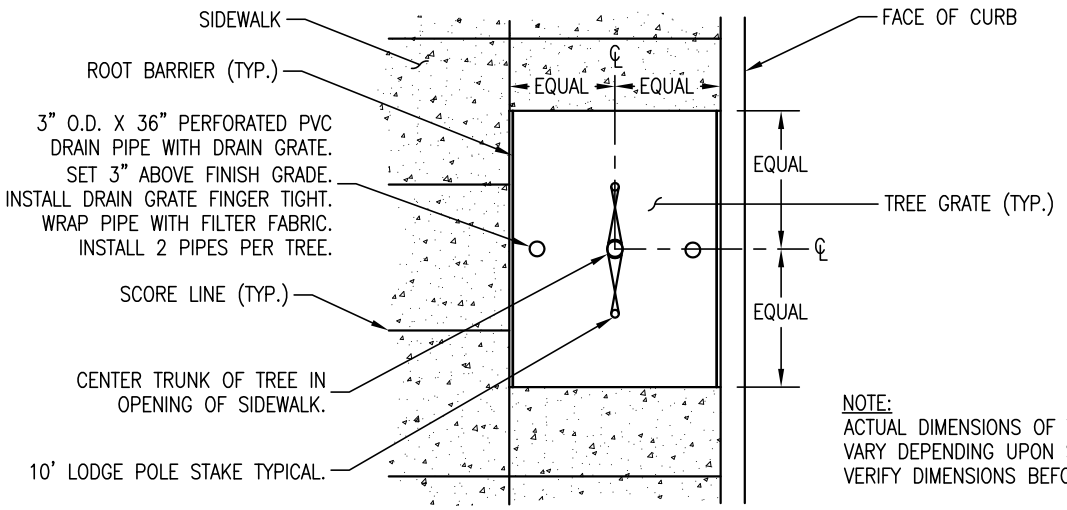

NOTE:
ACTUAL DIMENSIONS OF TREE GRATE MAY VARY DEPENDING UPON SIZE OF GRATE USED. VERIFY DIMENSIONS BEFORE SAWCUTTING.

PLAN VIEW
NO SCALE

* ALL TREES EXCEPT PALMS

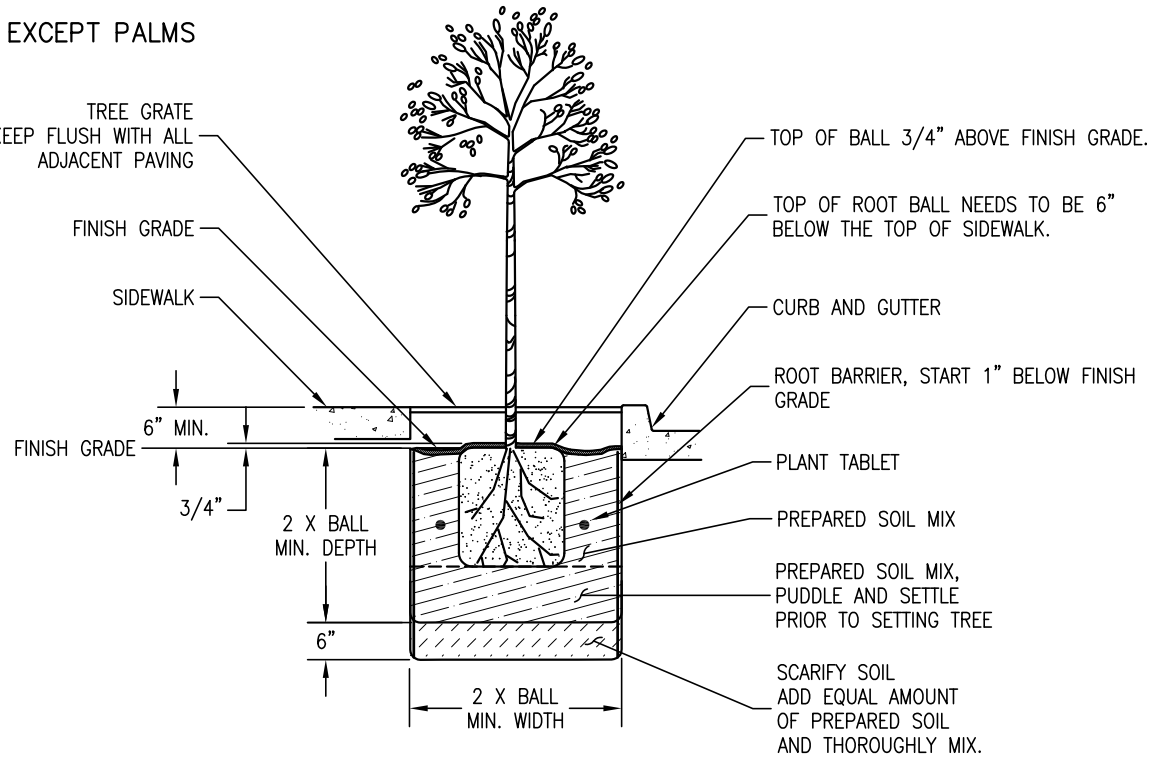

ELEVATION VIEW
NO SCALE

NOTES:

1. CONTACT UNDERGROUND SERVICE ALERT (USA) AT (800) 642–2444 AT LEAST 5 DAYS PRIOR TO BEGINNING EXCAVATION WORK TO LOCATE EXISTING UTILITIES.
2. BUILD SOIL BERM MIN. 4" HIGH AND 3' FROM TREE TRUNK IN PLANTER STRIP. PROVIDE LOAM TOPSOIL NEEDED TO FORM BERM AND FILL HOLES.
3. SOIL, CONCRETE AND OTHER MATERIALS SPILLED ON STREET, SIDEWALK, AND PLANTING AREA SHALL BE CLEANED UP IMMEDIATELY BY CONTRACTOR.
4. IF TREE PLANTING IS DELAYED AFTER TREE WELLS ARE CONSTRUCTED, HOLES WILL BE FILLED IN WITH SOIL UNTIL TREES ARE AVAILABLE.
5. TREE PLANTING PIT DRAINAGE TEST TO BE: AUGER HOLE 18" DEEP 6" DIA., FILL WITH WATER, LET DRAIN, FILL WITH WATER AGAIN AND HAVE CITY ARBORIST ON SITE TO REVIEW DRAINAGE AND MAKE ANY NECESSARY RECOMMENDATIONS AT THAT TIME.

DRAWN BY: K. TRAN	TREE WELL	LS-4
CHECKED BY: C. QUANZ		
APPROVED BY: G. GOMEZ		
DATE: OCTOBER 2013	CITY OF SANTA CLARA	PAGE: 60

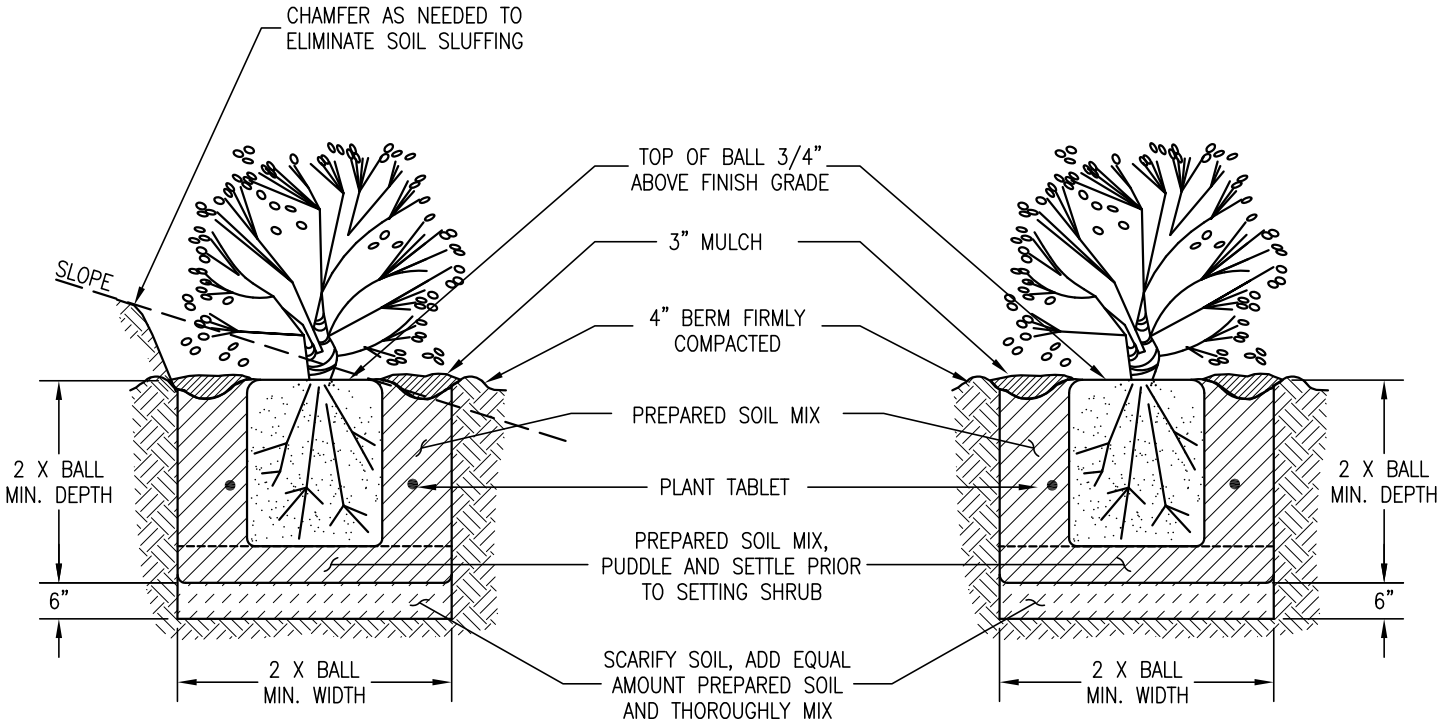

SLOPE SURFACE ELEVATION VIEW
NO SCALE

LEVEL SURFACE ELEVATION VIEW
NO SCALE

NOTES:

1. CONTACT UNDERGROUND SERVICE ALERT (USA) AT (800) 642–2444 AT LEAST 5 DAYS PRIOR TO BEGINNING EXCAVATION WORK TO LOCATE EXISTING UTILITIES.

2. BUILD SOIL BERM MIN. 4" HIGH AND 3' FROM SHRUB TRUNK IN PLANTER STRIP. PROVIDE LOAM TOPSOIL NEEDED TO FORM BERM AND FILL HOLES.

3. SOIL, CONCRETE AND OTHER MATERIALS SPILLED ON STREET, SIDEWALK, AND PLANTING AREA SHALL BE CLEANED UP IMMEDIATELY BY CONTRACTOR.

4. IF TREE PLANTING IS DELAYED AFTER TREE WELLS ARE CONSTRUCTED, HOLES WILL BE FILLED IN WITH SOIL UNTIL TREES ARE AVAILABLE.

5. SHRUB PLANTING PIT DRAINAGE TEST TO BE CONDUCTED AT 3 DIFFERENT LOCATIONS ON SITE. TEST TO BE: AUGER HOLE 18" DEEP 6" DIA., FILL WITH WATER, LET DRAIN, FILL WITH WATER AGAIN AND HAVE CITY ARBORIST ON SITE TO REVIEW DRAINAGE AND MAKE ANY NECESSARY RECOMMENDATIONS AT THAT TIME.

DRAWN BY: K. TRAN	SHRUB PLANTING		LS-5
CHECKED BY: C. QUANZ			
APPROVED BY: G. GOMEZ			
DATE: OCTOBER 2013	CITY OF SANTA CLARA		PAGE: 61

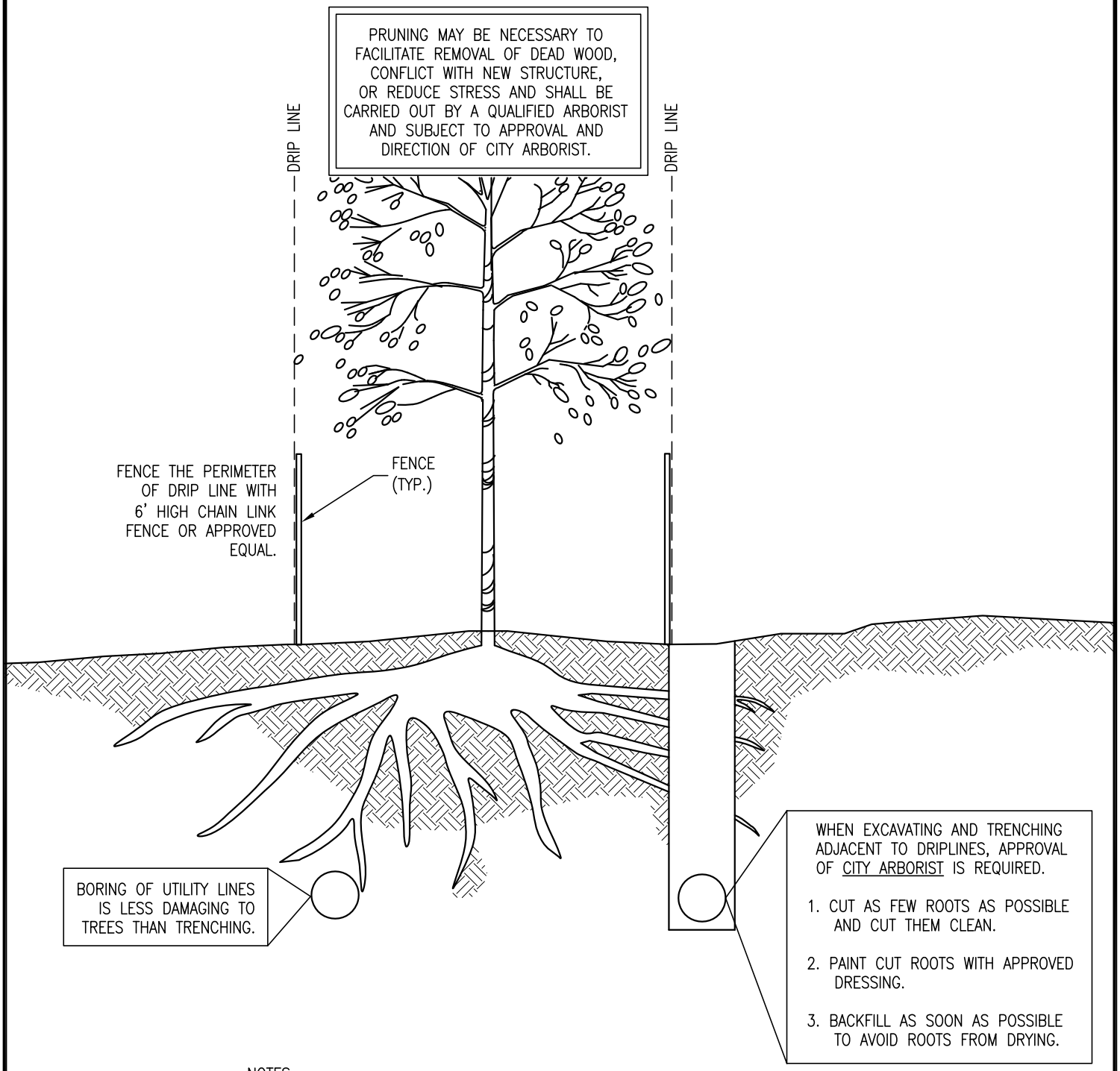

NOTES:

1. PROVIDE ADEQUATE RETAINING WALL – NO CLOSER THAN DRIP LINE. LARGE AMOUNTS OF FILL WILL INHIBIT DELICATE BALANCE BETWEEN ROOTS AND SOIL.
2. AVOID ANY PONDING BY DRAINING LOW POINTS.
3. PRIOR TO GRADING, INSTALL FENCES AND BARRICADES AROUND TREE.
4. FERTILIZE AND WATER TO MINIMIZE SHOCK AS DIRECTED BY QUALIFIED ARBORIST.

DRAWN BY: K. TRAN	TREE PROTECTION	LS-6
CHECKED BY: C. QUANZ		
APPROVED BY: G. GOMEZ		
DATE: OCTOBER 2013	CITY OF SANTA CLARA	PAGE: 62

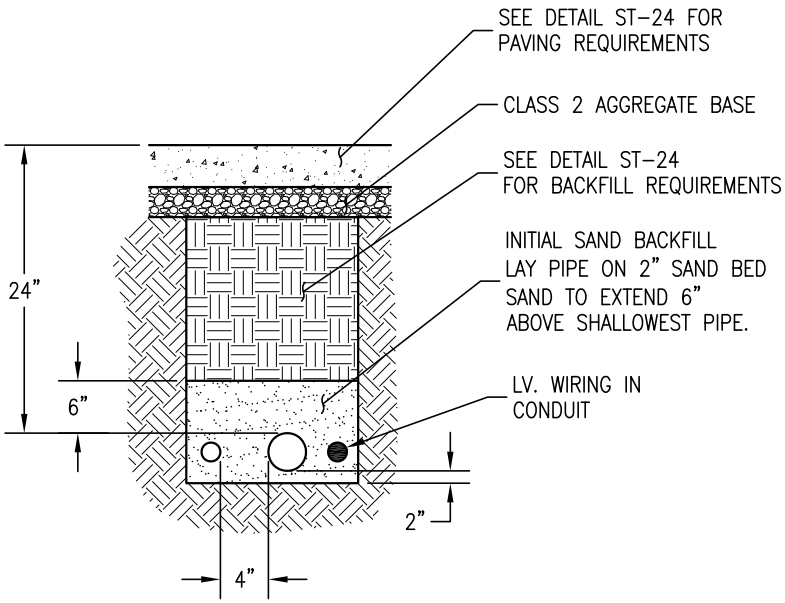

TRENCH IN PAVED AREA
ELEVATION VIEW
NO SCALE

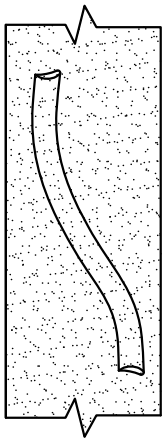

SNAKE ALL PIPE IN TRENCHES AS SHOWN

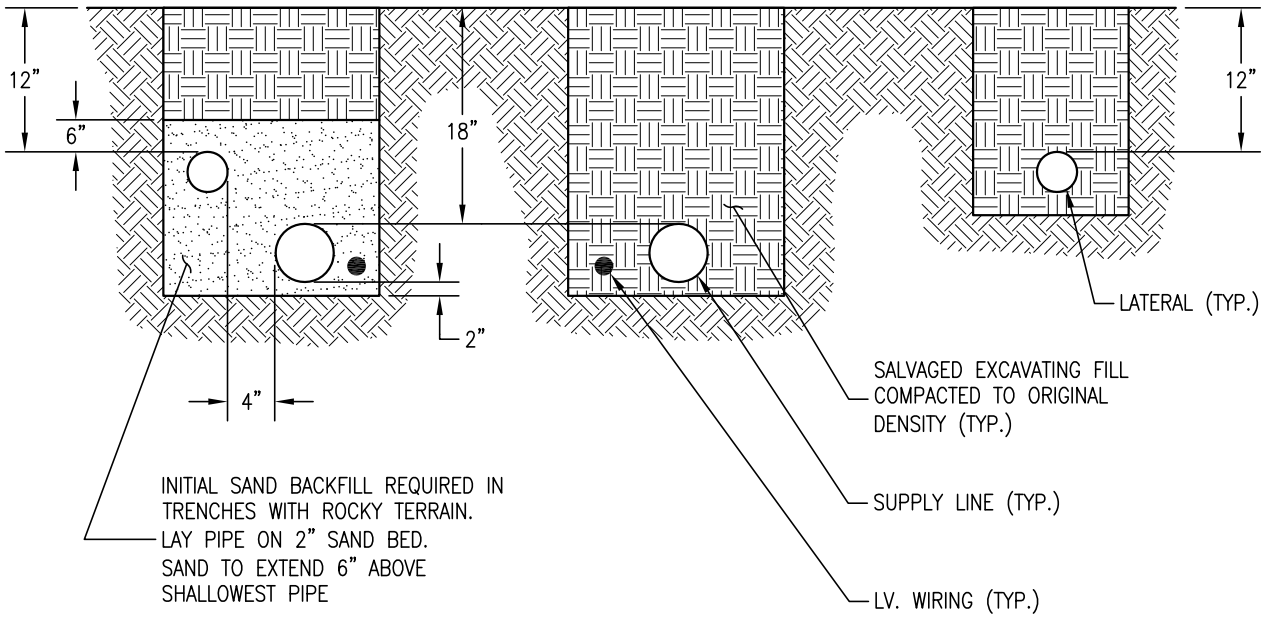

TRENCHES IN PLANTING AREA
ELEVATION VIEW
NO SCALE

DRAWN BY: K. TRAN	LANDSCAPE TRENCHING DETAILS	LS-7
CHECKED BY: C. QUANZ		
APPROVED BY: G. GOMEZ		
DATE: OCTOBER 2013	CITY OF SANTA CLARA	PAGE: 63

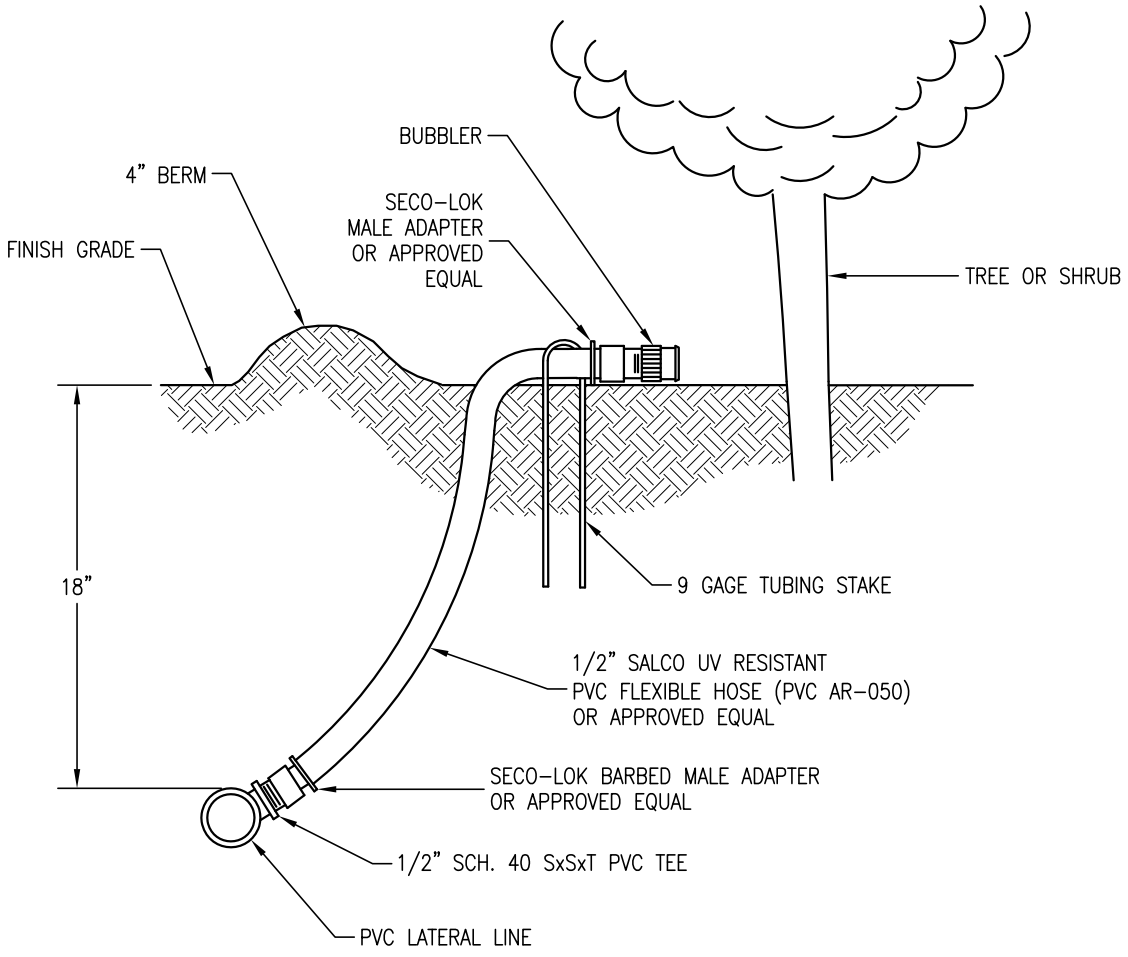

ELEVATION VIEW
NO SCALE

NOTES:

1. ONE BUBBLER PER TREE TO BE PLACED UPHILL SIDE OF ROOTBALL.
2. TREE BUBBLER TO BE A MINIMUM 1' AWAY FROM AERATION TUBE.

DRAWN BY: K. TRAN	TREE AND SHRUB BUBBLER	LS-8
CHECKED BY: C. QUANZ		
APPROVED BY: G. GOMEZ		
DATE: OCTOBER 2013	CITY OF SANTA CLARA	PAGE: 64

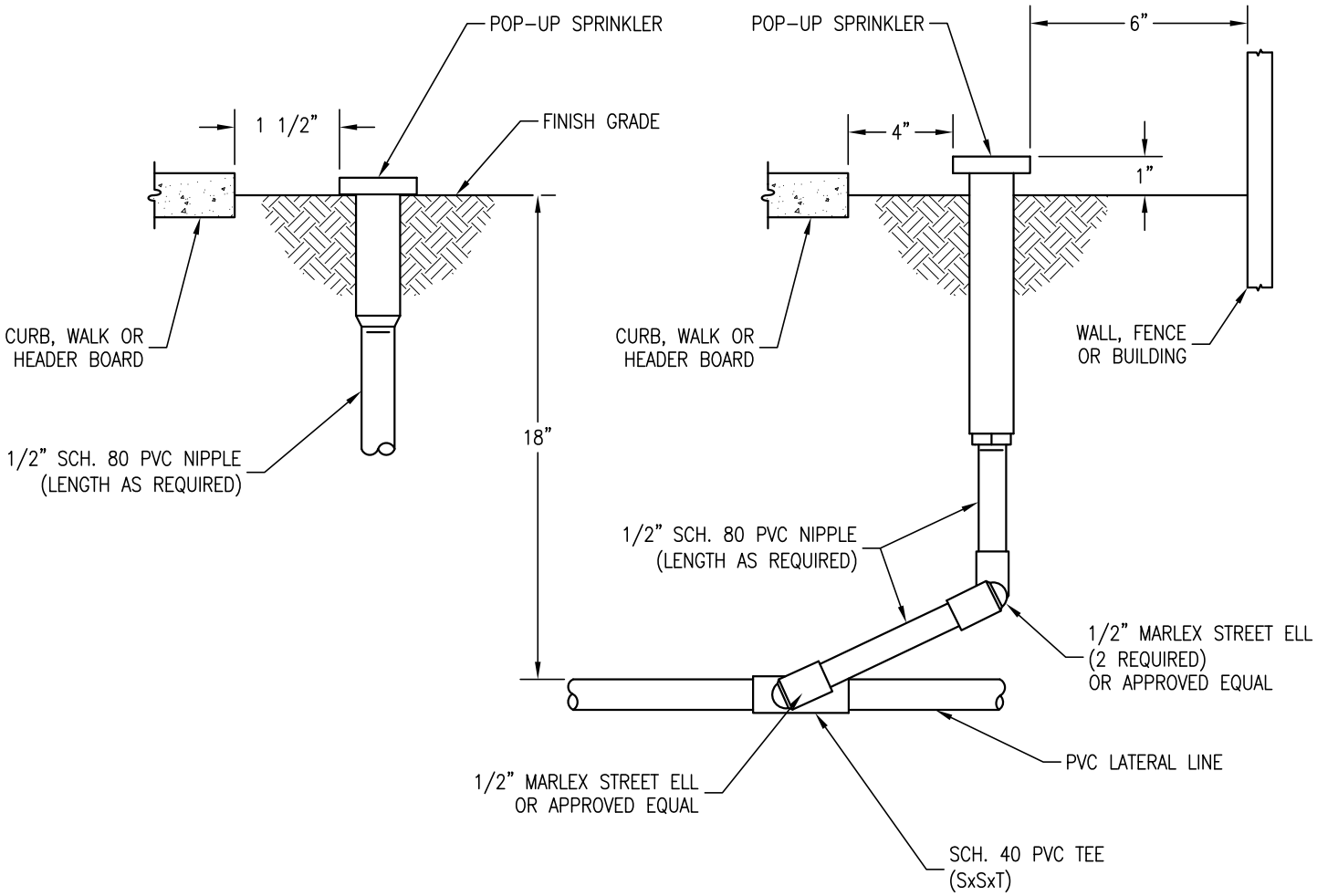

ELEVATION VIEW
NO SCALE

DRAWN BY: K. TRAN	POP-UP SPRINKLER	LS-9
CHECKED BY: C. QUANZ		
APPROVED BY: G. GOMEZ		
DATE: OCTOBER 2013	CITY OF SANTA CLARA	PAGE: 65

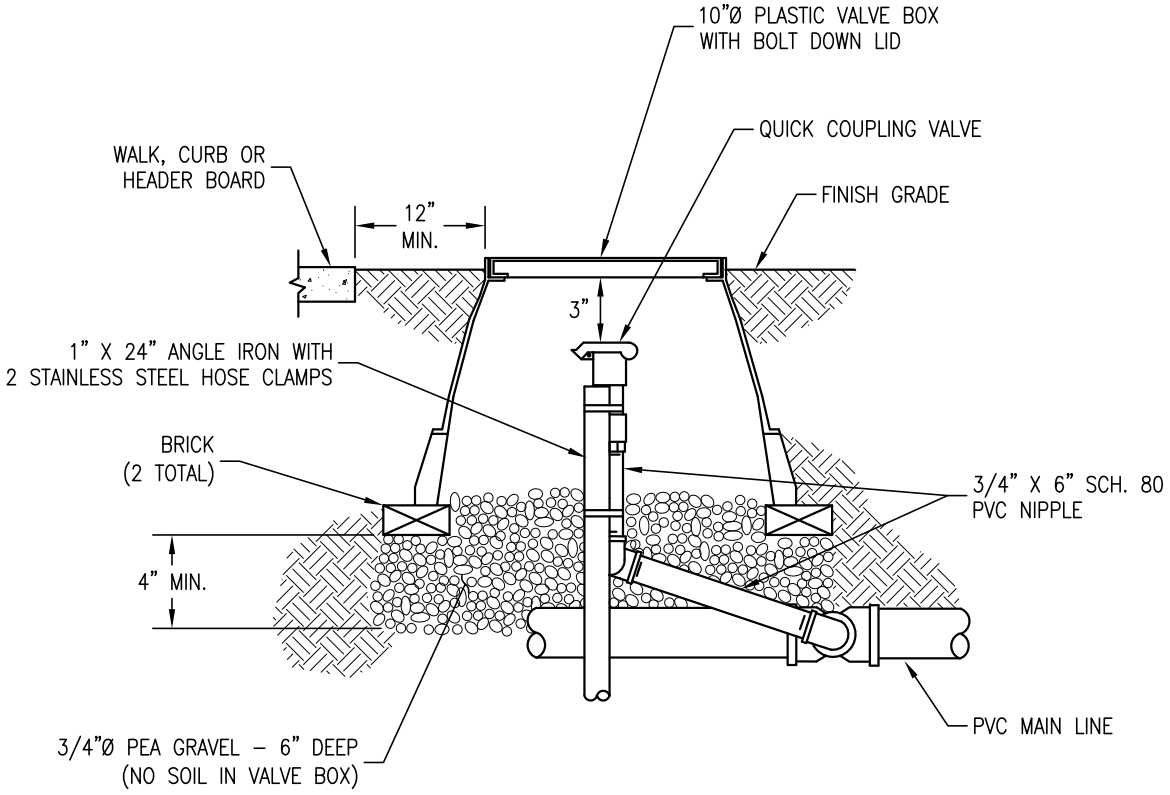

ELEVATION VIEW
NO SCALE

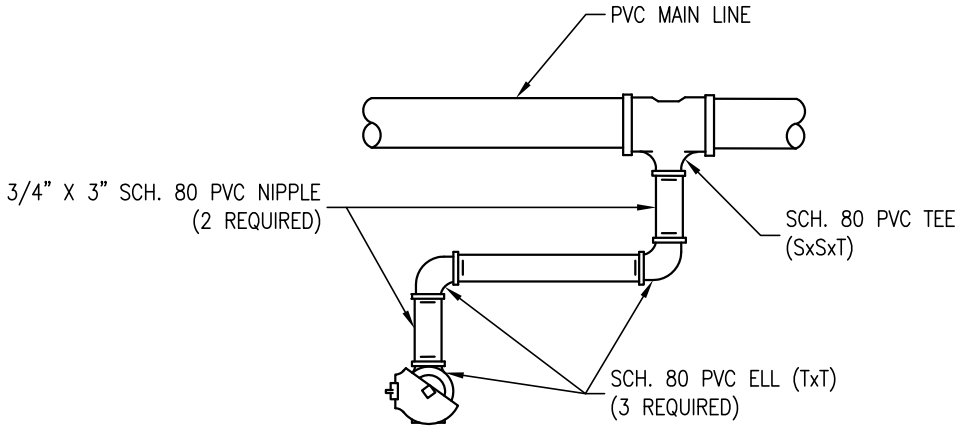

PLAN VIEW
NO SCALE

DRAWN BY: K. TRAN	QUICK COUPLER	LS-10
CHECKED BY: C. QUANZ		
APPROVED BY: G. GOMEZ		
DATE: OCTOBER 2013	CITY OF SANTA CLARA	PAGE: 66

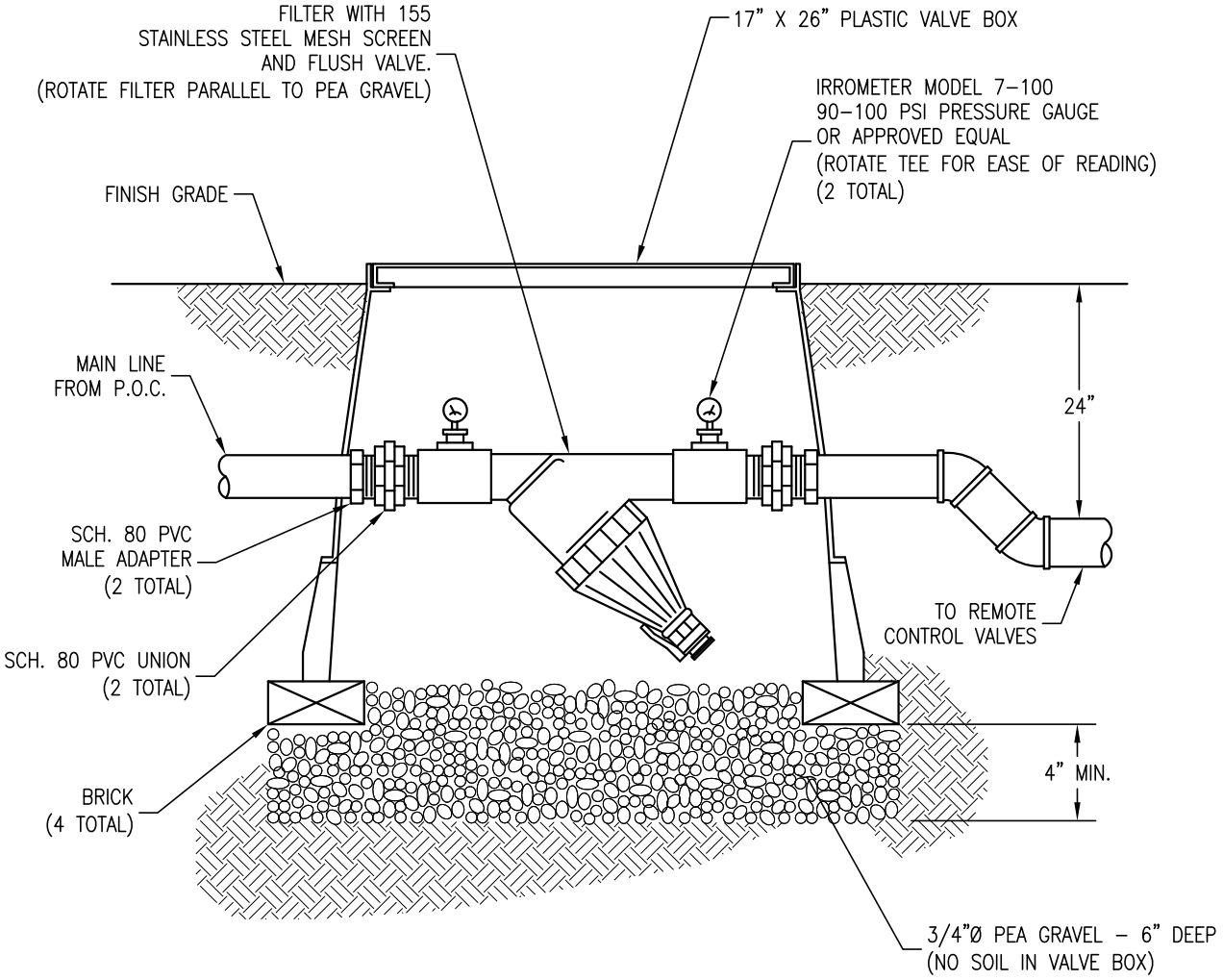

ELEVATION VIEW
NO SCALE

DRAWN BY: K. TRAN	LANDSCAPE FILTER	LS-11
CHECKED BY: C. QUANZ		
APPROVED BY: G. GOMEZ		
DATE: OCTOBER 2013	CITY OF SANTA CLARA	PAGE: 67

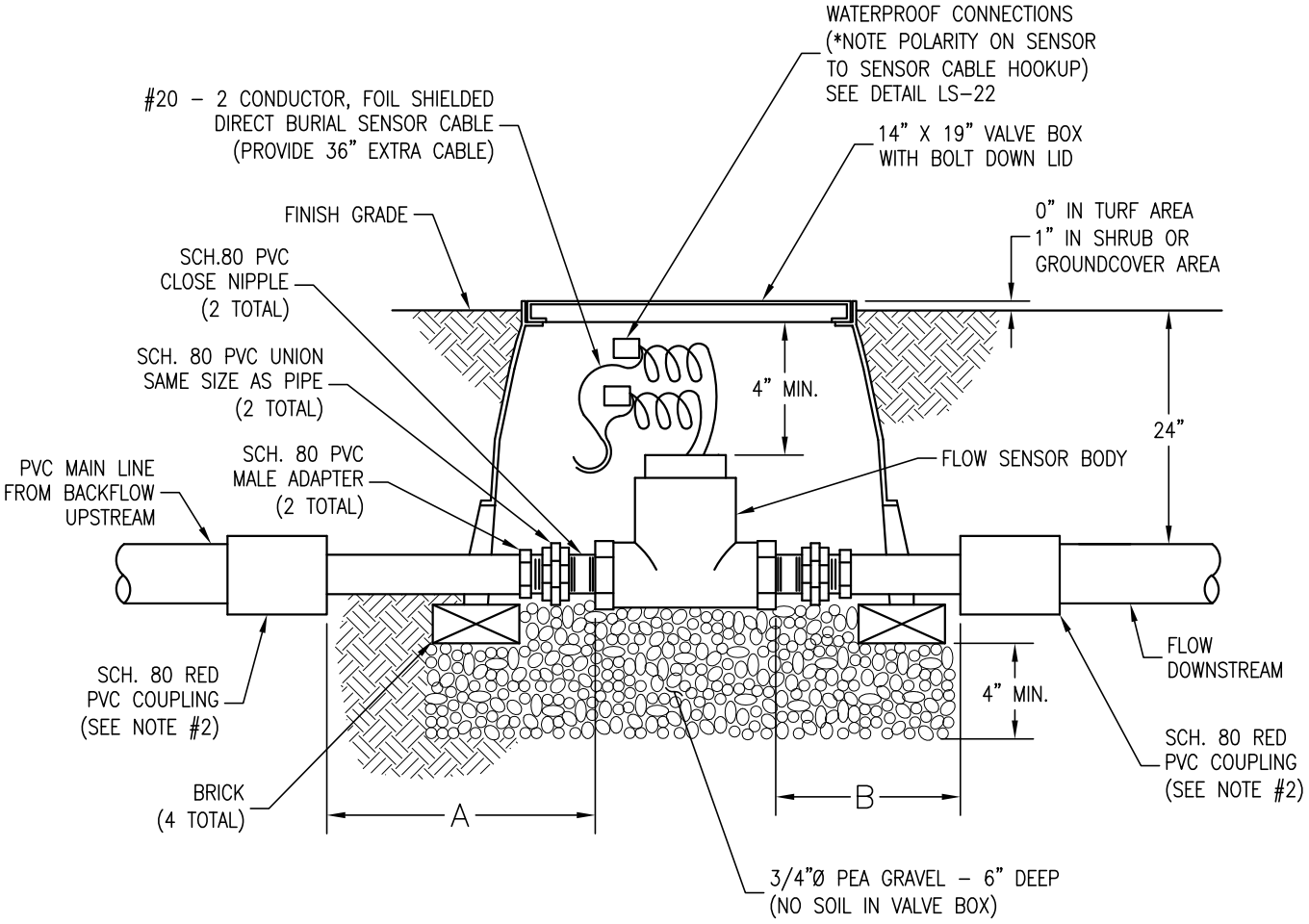

ELEVATION VIEW

NO SCALE

NOTES:

1. FLOW SENSOR MUST BE INSTALLED WITH INSERT (TOP) VERTICAL AND BODY (TEE) POSITIONED HORIZONTALLY.

2. REDUCER COUPLING MUST BE AT A DISTANCE EQUAL TO 10 TIMES THE PIPE DIAMETER ON THE UPSTREAM SIDE (A) AND 5 TIMES THE THE PIPE DIAMETER ON THE DOWNSTREAM (B) SIDE.

   EXAMPLE: FOR 3" FLOW SENSOR, 30" ON UPSTREAM SIDE AND 15" ON DOWNSTREAM SIDE.

DRAWN BY: K. TRAN	FLOW SENSOR	LS-12
CHECKED BY: C. QUANZ		
APPROVED BY: G. GOMEZ		
DATE: OCTOBER 2013	CITY OF SANTA CLARA	PAGE: 68

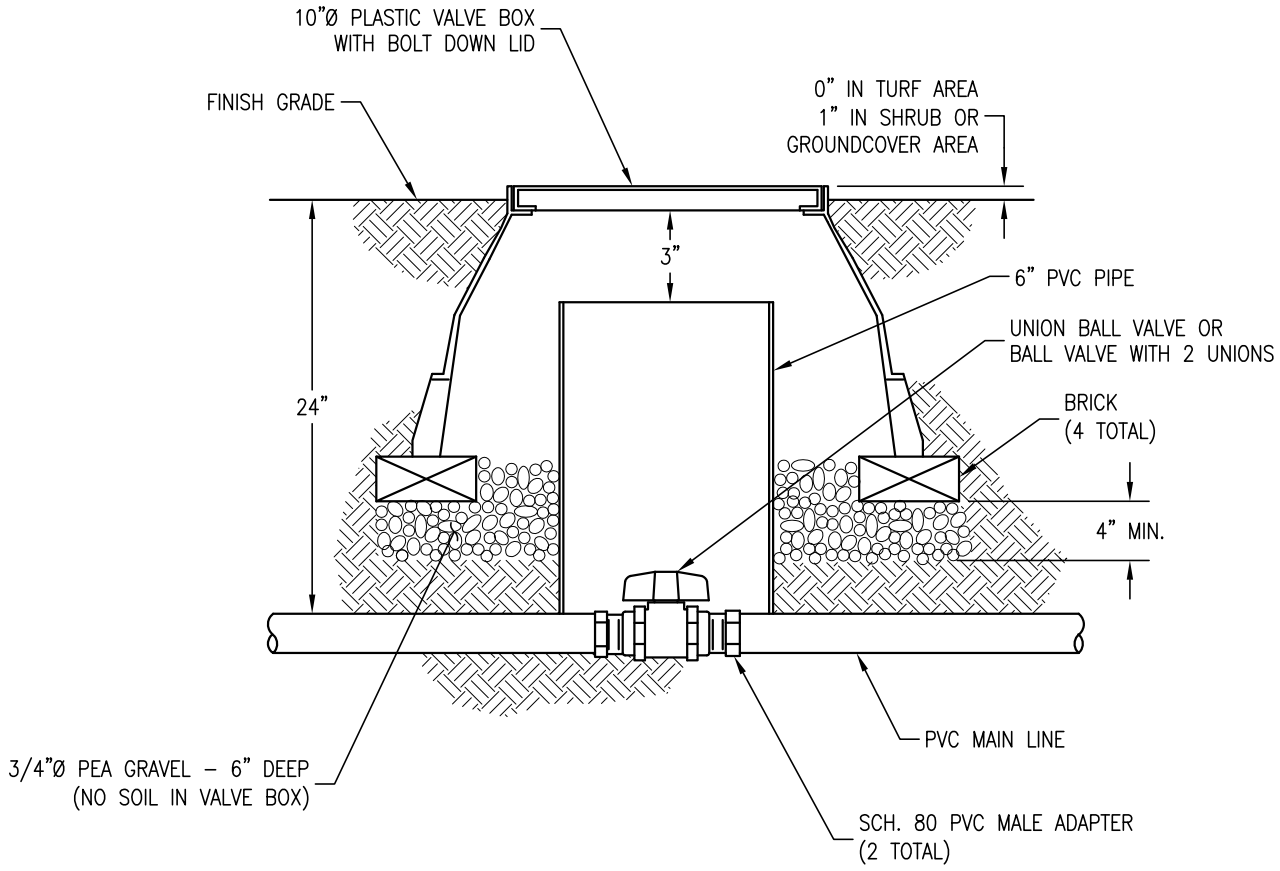

ELEVATION VIEW
NO SCALE

DRAWN BY: K. TRAN	UNION BALL VALVE	LS-13
CHECKED BY: C. QUANZ		
APPROVED BY: G. GOMEZ		
DATE: OCTOBER 2013	CITY OF SANTA CLARA	PAGE: 69

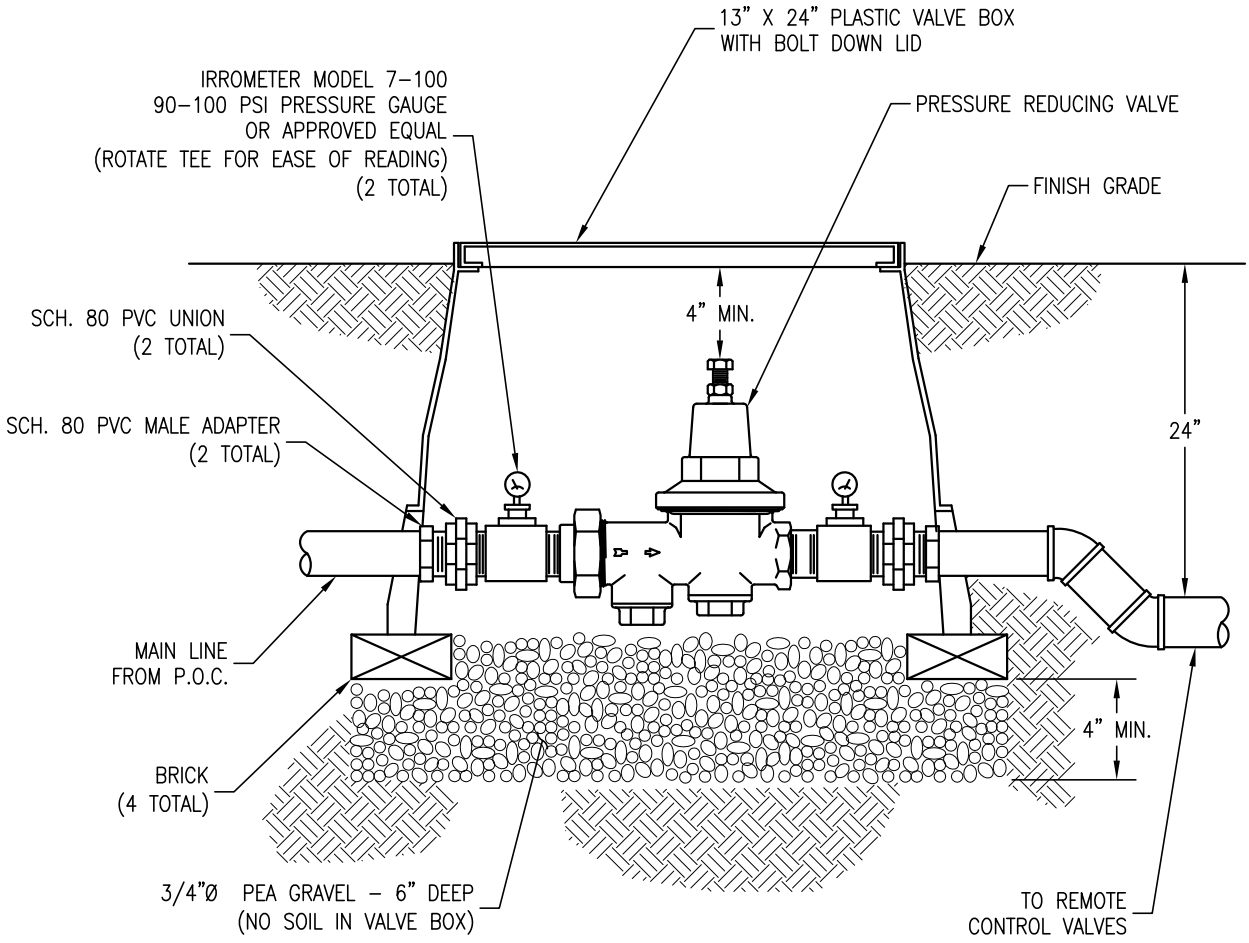

ELEVATION VIEW
NO SCALE

DRAWN BY: K. TRAN	PRESSURE REDUCING VALVE	LS-14
CHECKED BY: C. QUANZ		
APPROVED BY: G. GOMEZ		
DATE: OCTOBER 2013	CITY OF SANTA CLARA	PAGE: 70

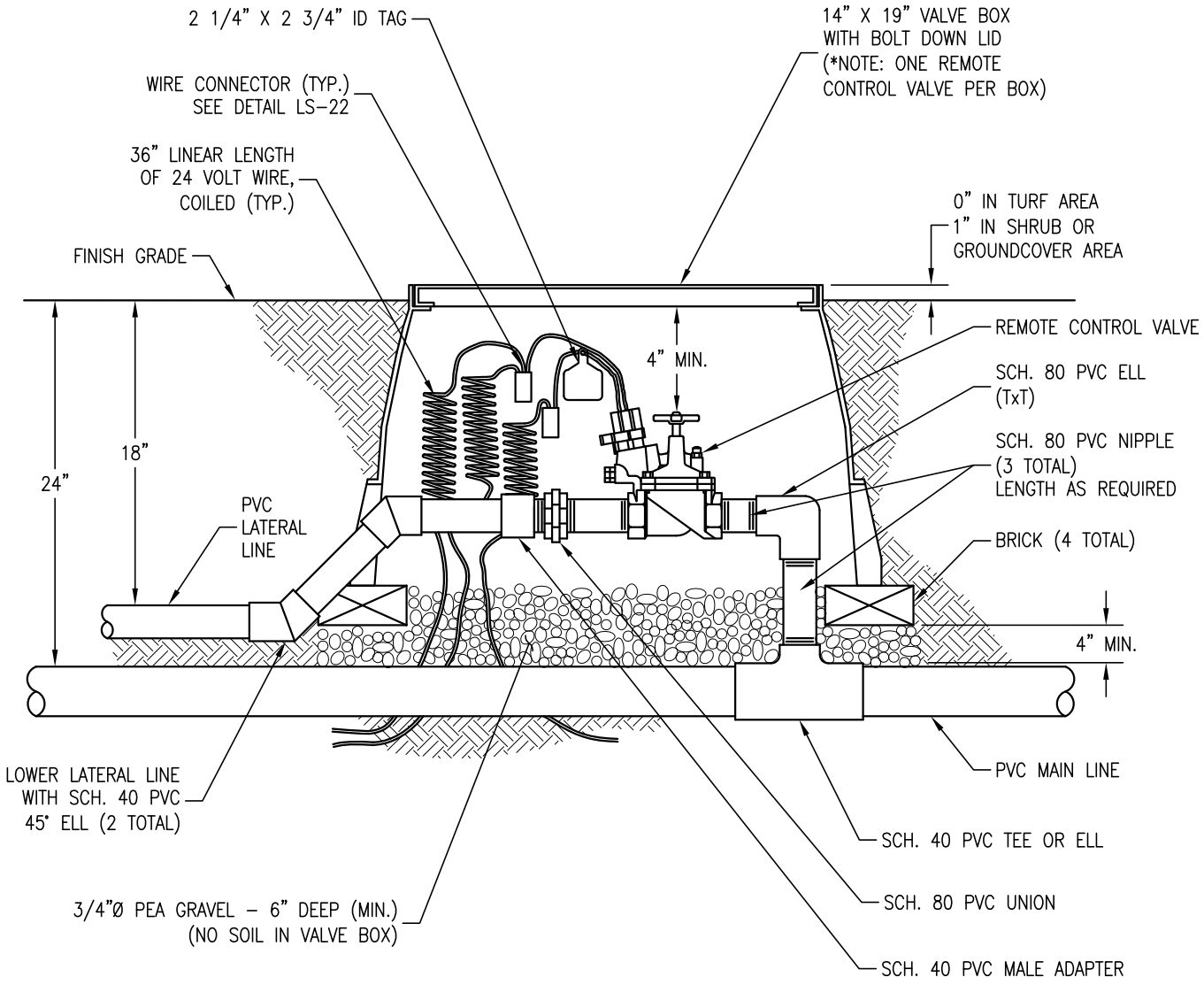

ELEVATION VIEW
NO SCALE

DRAWN BY: K. TRAN	REMOTE CONTROL VALVE	LS-15
CHECKED BY: C. QUANZ		
APPROVED BY: G. GOMEZ		
DATE: OCTOBER 2013	CITY OF SANTA CLARA	PAGE: 71

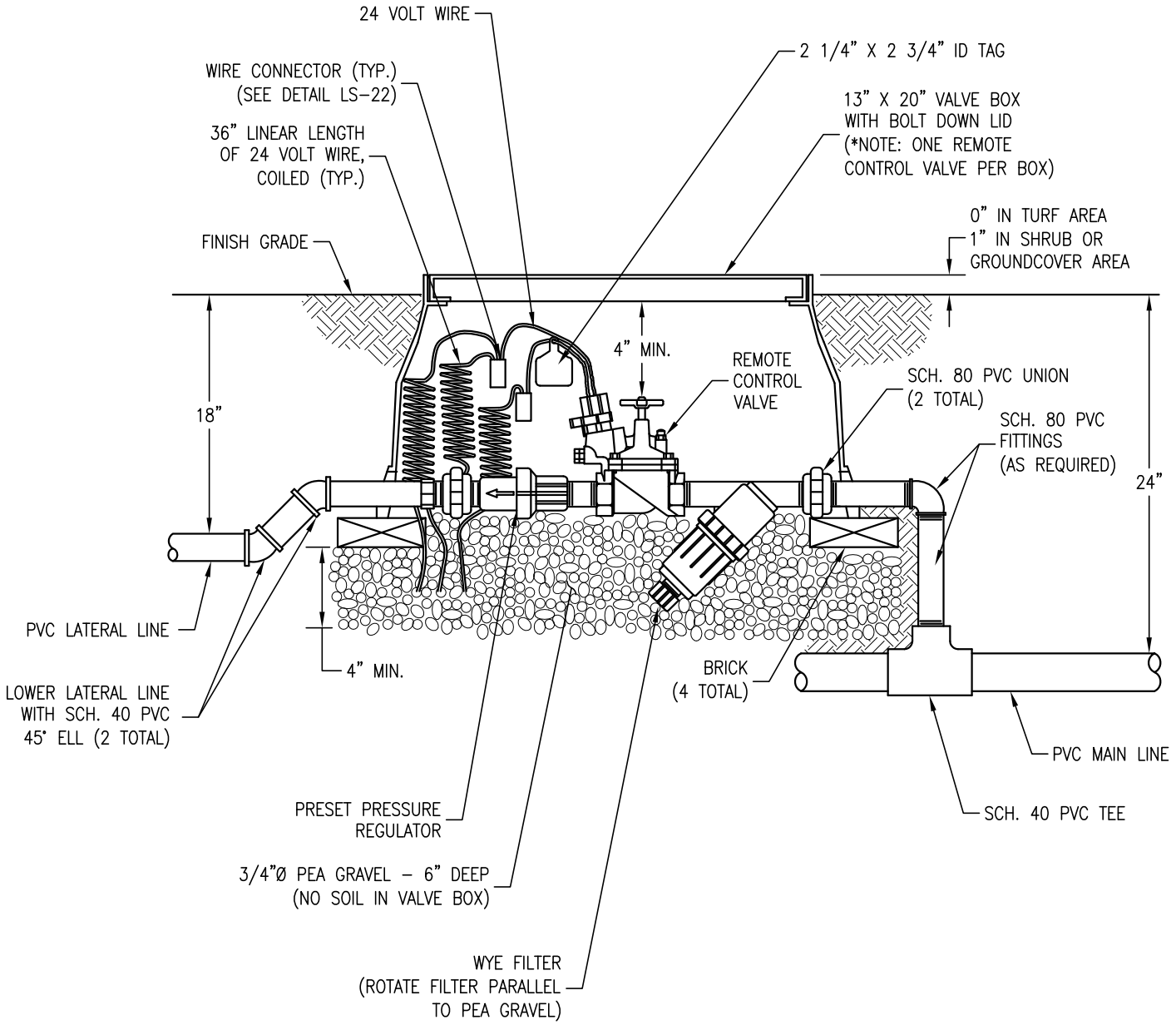

ELEVATION VIEW
NO SCALE

DRAWN BY: K. TRAN	LOW VOLUME REMOTE CONTROL VALVE	LS-16
CHECKED BY: C. QUANZ		
APPROVED BY: G. GOMEZ		
DATE: OCTOBER 2013	CITY OF SANTA CLARA	PAGE: 72

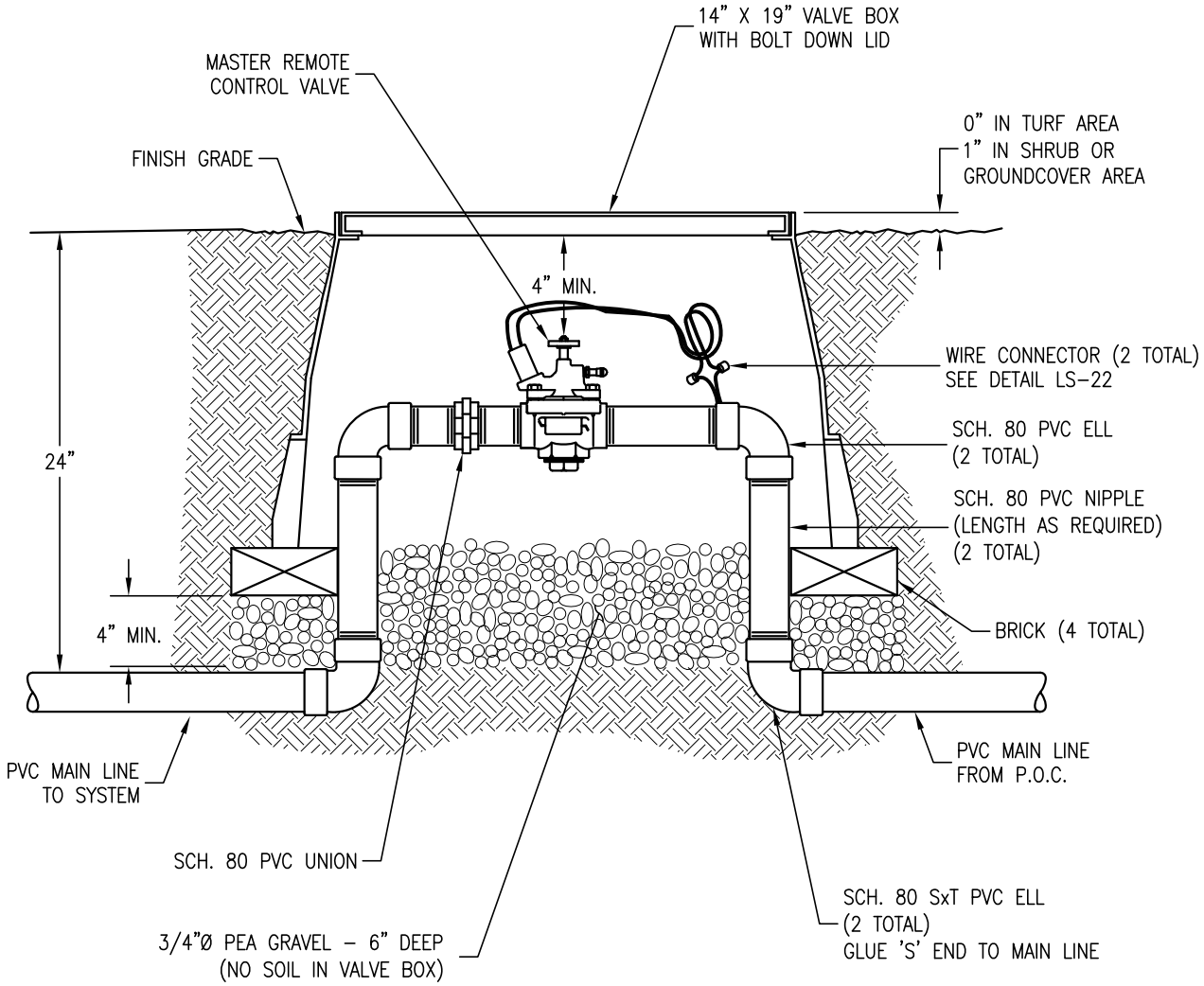

ELEVATION VIEW
NO SCALE

DRAWN BY: K. TRAN	MASTER REMOTE CONTROL VALVE	LS-17
CHECKED BY: C. QUANZ		
APPROVED BY: G. GOMEZ		
DATE: OCTOBER 2013	CITY OF SANTA CLARA	PAGE: 73

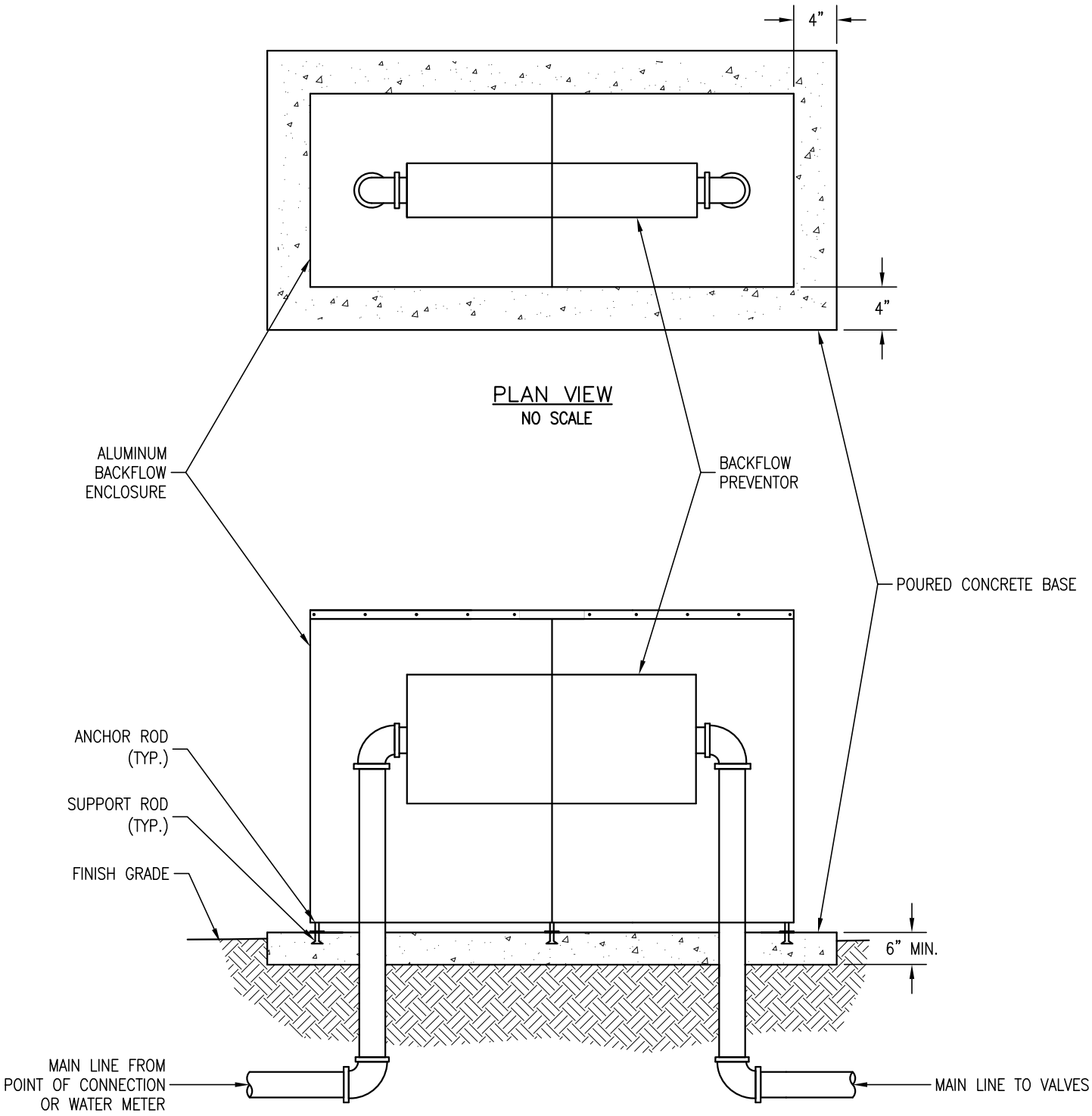

DRAWN BY: K. TRAN	BACKFLOW ENCLOSURE	LS-18
CHECKED BY: C. QUANZ		
APPROVED BY: G. GOMEZ		
DATE: OCTOBER 2013	CITY OF SANTA CLARA	PAGE: 74

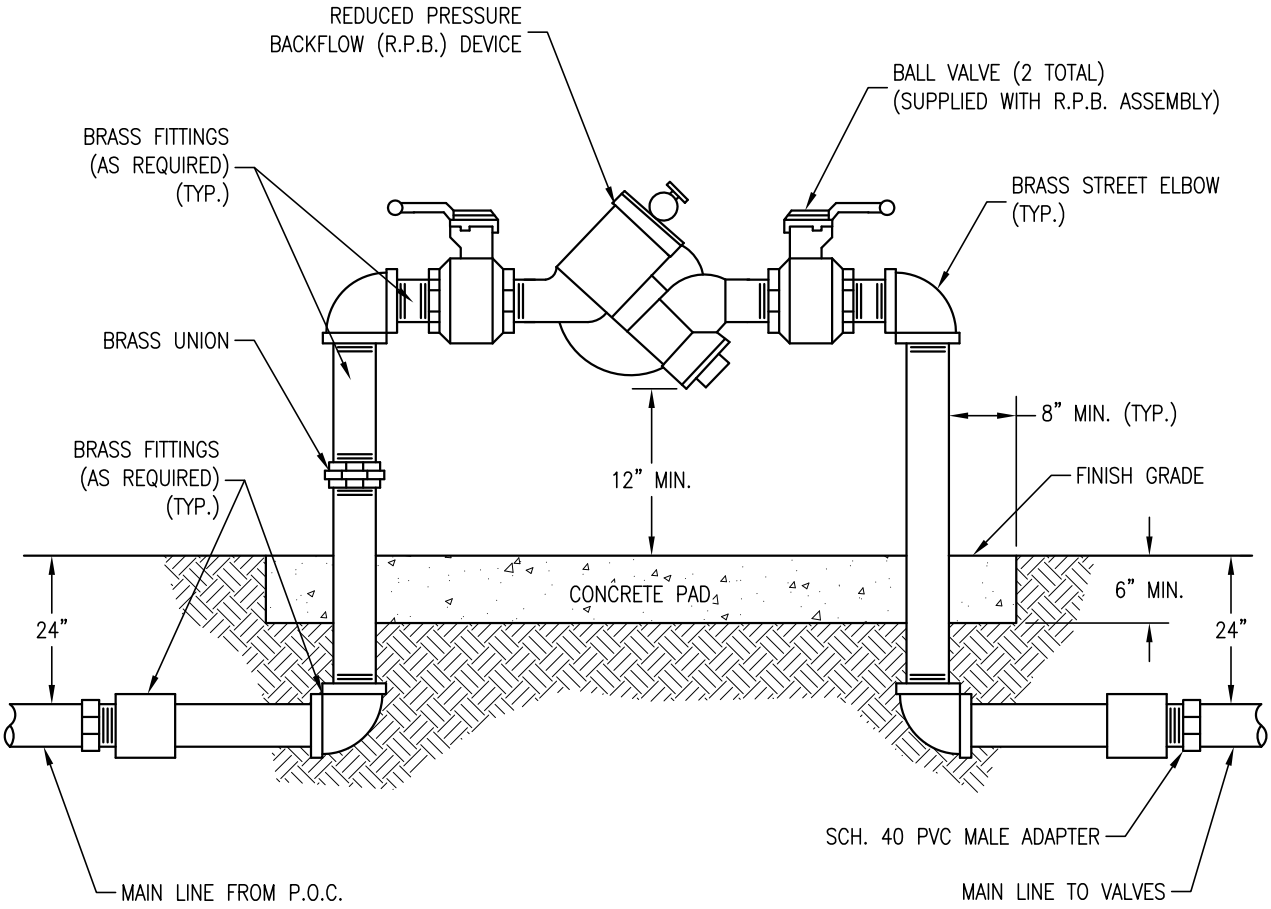

ELEVATION VIEW
NO SCALE

NOTES:

1. EVENLY COAT METAL FITTINGS EXPOSED TO SOIL AND CONCRETE WITH 3M SCOTCHRAP PIPE PRIMER AND THEN WRAP WITH 3M SCOTCHRAP NO. 51 BLACK TAPE (3/4" OVERLAP).

2. FOR SERVICE CONNECTION, REFER TO WATER & SEWER DEPARTMENT STANDARD DETAILS.

DRAWN BY: K. TRAN	REDUCED PRESSURE BACKFLOW ASSEMBLY	LS-19
CHECKED BY: C. QUANZ		
APPROVED BY: G. GOMEZ		
DATE: OCTOBER 2013	CITY OF SANTA CLARA	PAGE: 75

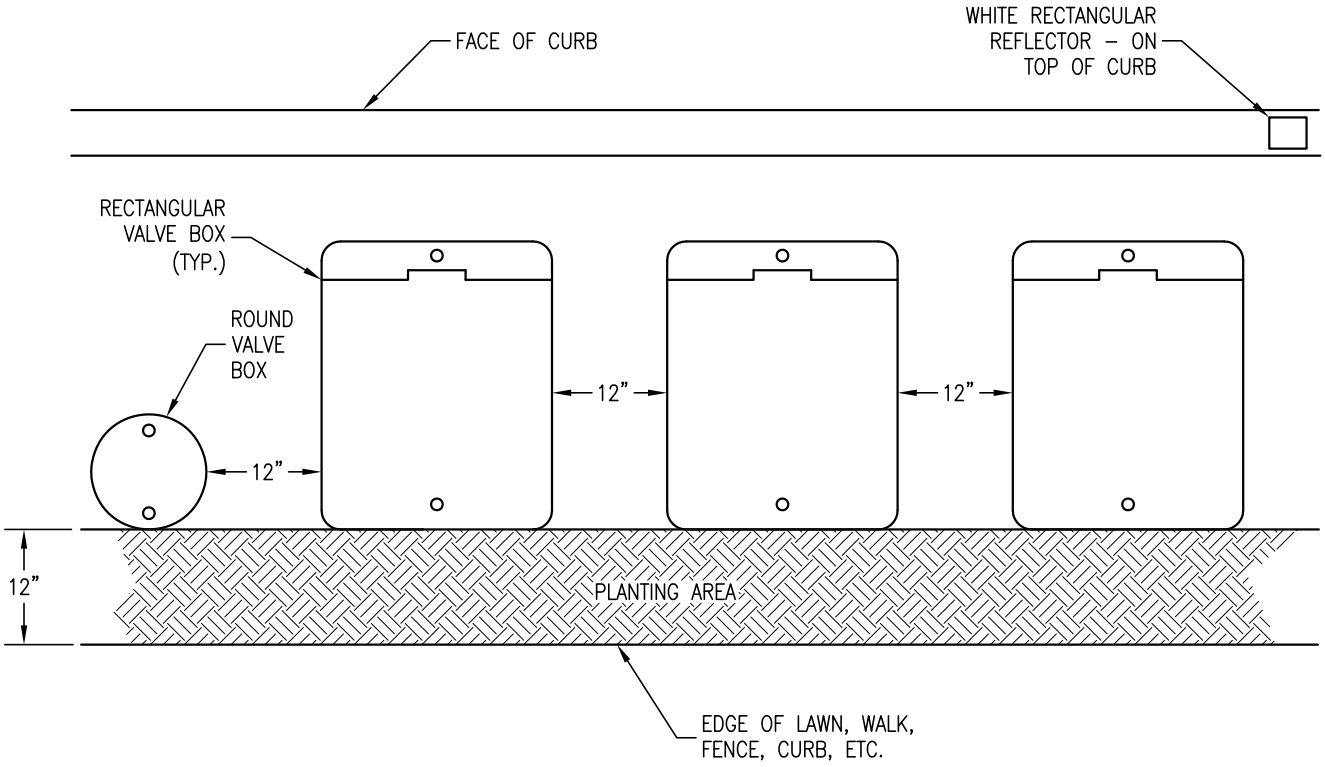

PLAN VIEW
NO SCALE

NOTES:

1. CENTER BOXES OVER VALVES.
2. SET BOXES IN GROUND COVER/SHRUB AREA WHERE POSSIBLE.
3. SET BOXES PARALLEL TO EACH OTHER AND PERPENDICULAR TO EDGE.
4. AVOID HEAVILY COMPACTING SOIL AROUND BOXES TO PREVENT DAMAGING VALVE BOXES

DRAWN BY: K. TRAN	IRRIGATION VALVE BOX LOCATIONS	LS-20
CHECKED BY: C. QUANZ		
APPROVED BY: G. GOMEZ		
DATE: OCTOBER 2013	CITY OF SANTA CLARA	PAGE: 76

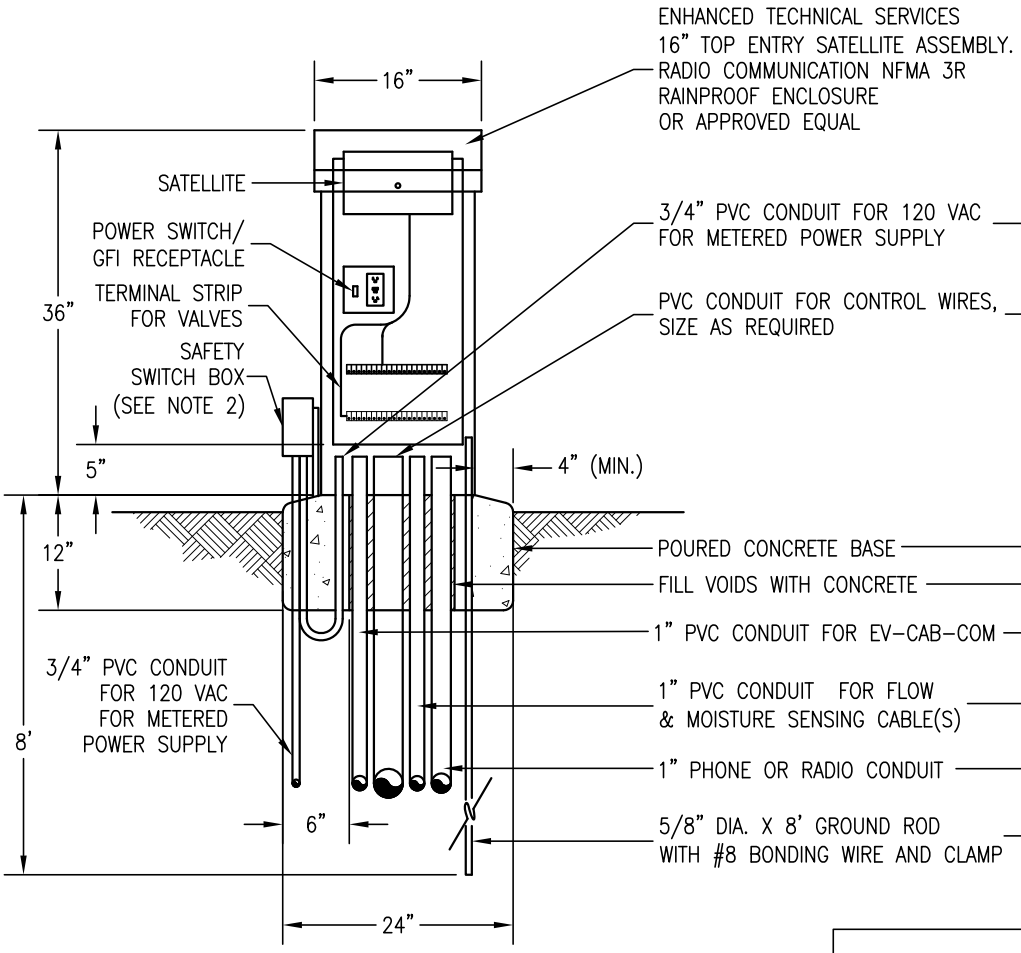

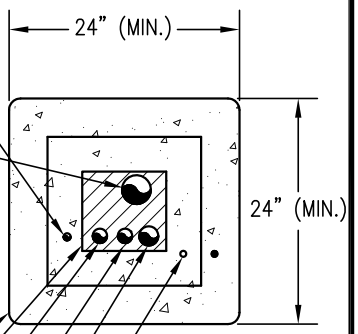

BOTTOM VIEW
NO SCALE

16" ENTRY SATELLITE ASSEMBLY
(SA6-RM8-(STA#)/DX3)
OR APPROVED EQUAL
ELEVATION VIEW
NO SCALE

NOTES:

1. ENCLOSURE TYPE MAY VARY PER APPLICATION UPON APPROVAL.
2. SAFETY SWITCH BOX SHALL BE SERIES E3 RAINPROOF 30 AMPS TYPE 3R ENCLOSURE, OR APPROVED EQUAL.
3. SAFETY SWITCH BOX SHALL BE ATTACHED EITHER TO THE ENCLOSURE EXTERIOR OR TO APPROVED POST (1"X1" STEEL OR 4"X4" WOOD).

SA ASSEMBLY TO INCLUDE

- CONTROLLER MODEL AS SPECIFIED
- ENCLOSURE MODEL AS SPECIFIED
- OPTIONS AS SPECIFIED
- TERMINAL STRIPS
- TEMPLATE & BOLTS
- 8' COPPER GROUND ROD
- 5 YEAR LIMITED WARRANTY
- CONTACT ENHANCED TECHNICAL SERVICES TO OBTAIN CERTIFICATION

DRAWN BY: K. TRAN	IRRIGATION SATELLITE (RADIO COMMUNICATION)	LS-21
CHECKED BY: C. QUANZ		
APPROVED BY: G. GOMEZ		
DATE: OCTOBER 2013	CITY OF SANTA CLARA	PAGE: 77

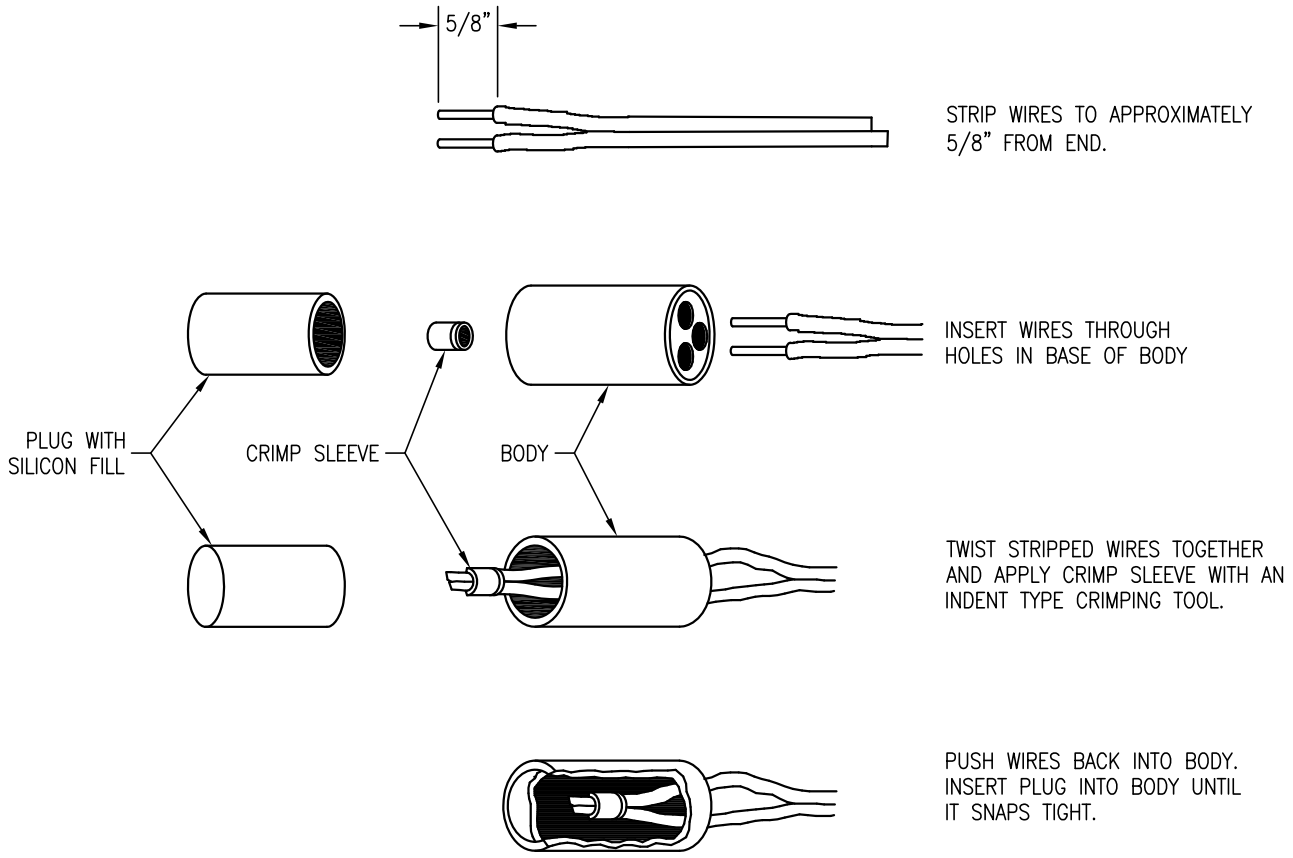

NOTES:

1. ONE CONNECTOR WILL HANDLE #10, #12 AND #14 AWG WIRES.
2. WIRE CONNECTOR WILL ACCEPT TWO OR THREE WIRE CONNECTIONS.
3. MANUFACTURED BY SPEARS, MODEL DS-400, OR APPROVED EQUAL.

DRAWN BY: K. TRAN	LOW VOLTAGE IRRIGATION WIRE CONNECTION	LS-22
CHECKED BY: C. QUANZ		
APPROVED BY: G. GOMEZ		
DATE: OCTOBER 2013	CITY OF SANTA CLARA	PAGE: 78

Department of Public Works
City of Santa Clara, CA

STANDARD DETAILS

MISCELLANEOUS SECTION

DETAILS MI-1 TO MI-4

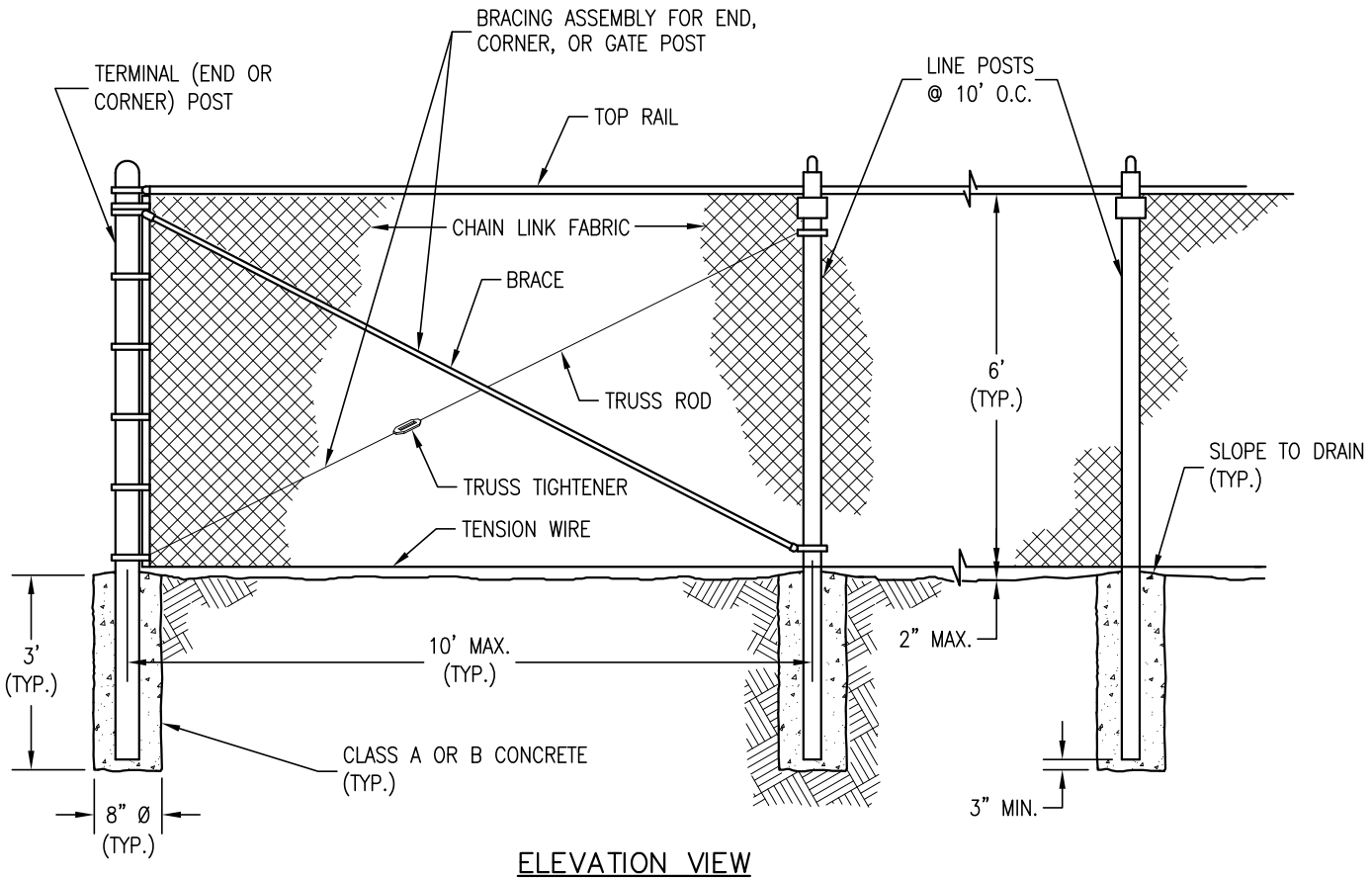

ELEVATION VIEW
NO SCALE

NOTES:

1. ALL MATERIALS AND CONSTRUCTION SHALL CONFORM TO CALTRANS REQUIREMENTS FOR CHAIN LINK FENCE AS SPECIFIED IN SECTION 80–4 OF THE STANDARD SPECIFICATION EXCEPT THAT IN LIEU OF TOP TENSION WIRE, TOP RAIL SHALL BE USED. TOP RAIL SHALL BE GALVANIZED STEEL PIPE NOT LESS THAN 1.63" OUTSIDE DIA. AND WEIGHING NOT LESS THAN 1.93 LBS. PER LINEAL FOOT.

2. CHAIN LINK FABRIC WIRE SHALL BE 11–GAGE MINIMUM. IF SPECIFIED, THE PLASTIC COATED STEEL MESH AND STAINED REDWOOD SLATS SHALL CONFORM TO THE FOLLOWING REQUIREMENTS:

   A) PLASTIC COATED CHAIN LINK FABRIC SHALL BE 11–GAGE PLASTIC COATED COMMERCIAL QUALITY STEEL WIRE WOVEN INTO A 2" MESH CHAIN LINK FABRIC. PLASTIC COATING SHALL BE FIRMLY BONDED TO THE STEEL CORE WIRE AND PROVIDE A DENSE IMPERVIOUS COVERING AT LEAST 0.005" THICK. THE COATING SHALL BE OF A HIGH QUALITY AND SHOW NO DELETERIOUS EFFECTS FROM CHEMICALS SUCH AS AMMONIUM HYDROXIDE, SODIUM CHLORIDE, GASOLINE, PETROLIUM OILS, OR HYDROCHLORIC ACID, NOR SHALL IT SUPPORT COMBUSTION. THE COATING SHALL ALSO HAVE AN ESTHETICALLY PLEASING COLOR THAT WILL NOT FADE, CRACK, OR SPLIT FROM NORMAL AGE AND EXPOSURE.

   B) REDWOOD PICKET CHAIN LINK FABRIC SHALL HAVE 9–GAGE HEAVILY ZINC COATED CHAIN LINK WIRE WOVEN IN A 3 1/2" X 5 1/2" MESH AND STANDARD GRADE "A" 3/8" X 2 1/2" STAINED REDWOOD PICKETS INSERTED VERTICALLY IN EACH MESH OF THE CHAIN LINK FABRIC FOR THE FULL HEIGHT OF THE FABRIC.

DRAWN BY: K. TRAN	CHAIN LINK FENCE	MI-1
CHECKED BY: F. AMIN		
APPROVED BY: G. GOMEZ		
DATE: OCTOBER 2013	CITY OF SANTA CLARA	PAGE: 79

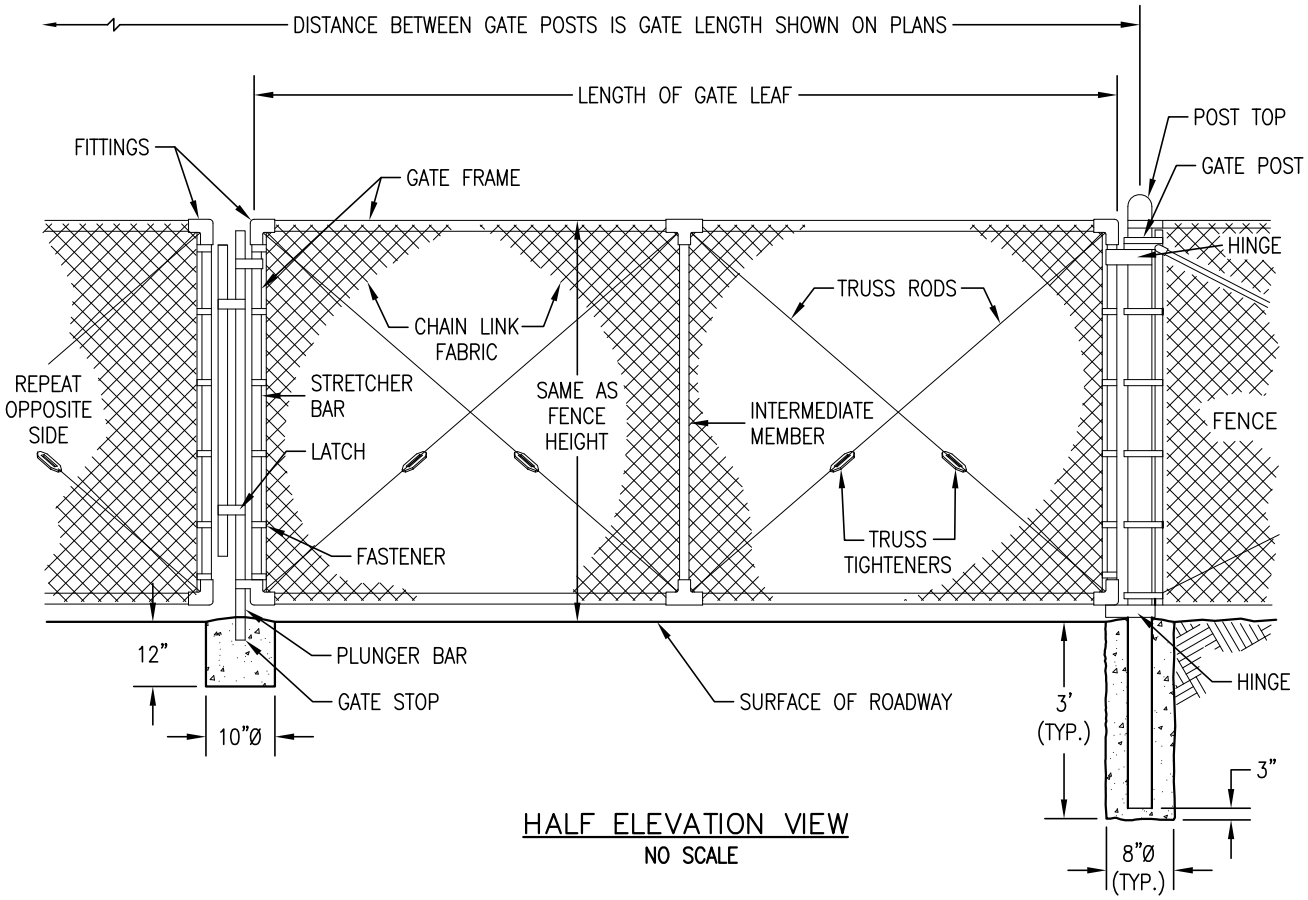

HALF ELEVATION VIEW
NO SCALE

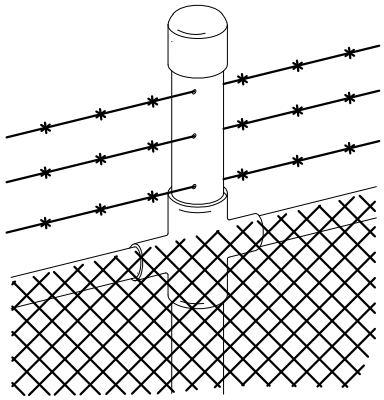

EXTENSION POST AND BARBED WIRE DETAIL
NO SCALE

NOTES:

1. ALL FOOTINGS SHALL BE CLASS "A" OR "B" CONCRETE.
2. EXTENSION POST AND BARBED WIRE SHALL BE INSTALLED ONLY WHEN SHOWN ON THE PLANS AND/OR WHEN CALLED FOR IN THE SPECIAL PROVISIONS.
3. CHAIN LINK FABRIC WIRE SHALL BE 11-GAGE MINIMUM. SEE DETAIL MI-1 FOR PLASTIC COATED STEEL MESH AND STAINED REDWOOD SLATS, IF SPECIFIED.

DRAWN BY: K. TRAN	CHAIN LINK DOUBLE SWING GATE	MI-2
CHECKED BY: F. AMIN		
APPROVED BY: G. GOMEZ		
DATE: OCTOBER 2013	CITY OF SANTA CLARA	PAGE: 80

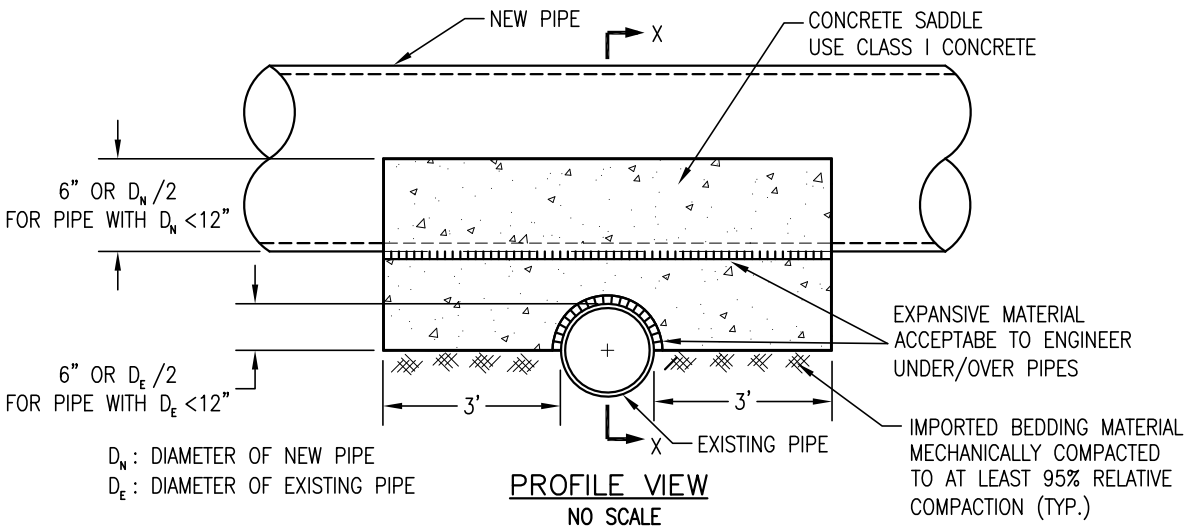

PROFILE VIEW
NO SCALE

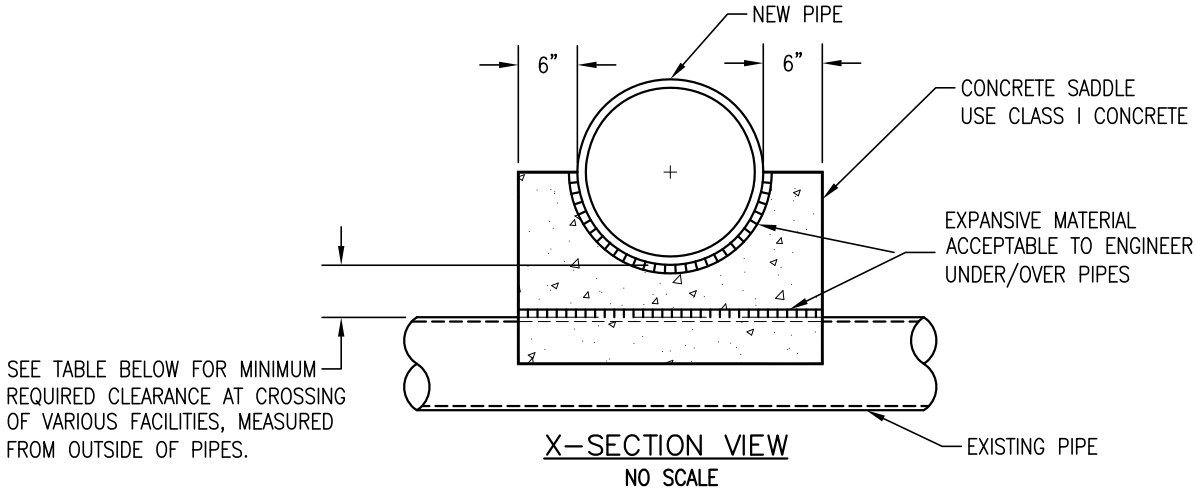

X–SECTION VIEW
NO SCALE

NOTE: INSTALL CONCRETE SADDLE AT EACH LOCATION WHERE A NEW UTILITY CROSSES AN EXISTING UTILITY WITH LESS THAN 12" CLEARANCE.

TABLE: CONCRETE SADDLE MINIMUM REQUIRED CLEARANCE (INCHES)

	WATER	RECYCLED WATER	SANITARY SEWER	STORM DRAIN	GAS	ELECTRIC	COMMUNICATIONS	OTHER
WATER	SEE NOTE 1	SEE NOTE 1	SEE NOTE 1	SEE NOTE 1	SEE NOTE 1	SEE NOTE 1	SEE NOTE 1	SEE NOTE 1
RECYCLED WATER	SEE NOTE 1	SEE NOTE 1	SEE NOTE 1	SEE NOTE 1	SEE NOTE 1	SEE NOTE 1	SEE NOTE 1	SEE NOTE 1
SANITARY SEWER	SEE NOTE 1	SEE NOTE 1	3	3	6	SEE NOTE 1	6	SEE NOTE 1
STORM DRAIN	SEE NOTE 1	SEE NOTE 1	3	3	6	SEE NOTE 1	6	SEE NOTE 1
GAS	SEE NOTE 1	SEE NOTE 1	6	6	3	SEE NOTE 1	6	SEE NOTE 1
ELECTRIC	SEE NOTE 1	SEE NOTE 1	SEE NOTE 1	SEE NOTE 1	SEE NOTE 1	SEE NOTE 1	SEE NOTE 1	SEE NOTE 1
COMMUNICATIONS	SEE NOTE 1	SEE NOTE 1	6	6	6	SEE NOTE 1	3	SEE NOTE 1
OTHER	SEE NOTE 1	SEE NOTE 1	SEE NOTE 1	SEE NOTE 1	SEE NOTE 1	SEE NOTE 1	SEE NOTE 1	SEE NOTE 1

NOTE 1: CHECK WITH SPECIFIC UTILITY DEPARTMENT/AGENCY FOR CONCRETE SADDLE MINIMUM REQUIRED CLEARANCE.

DRAWN BY: K. TRAN	CONCRETE SADDLE UPPER PIPE INSTALLATION	MI-3
CHECKED BY: F. AMIN		
APPROVED BY: G. GOMEZ		
DATE: OCTOBER 2013	CITY OF SANTA CLARA	PAGE: 81

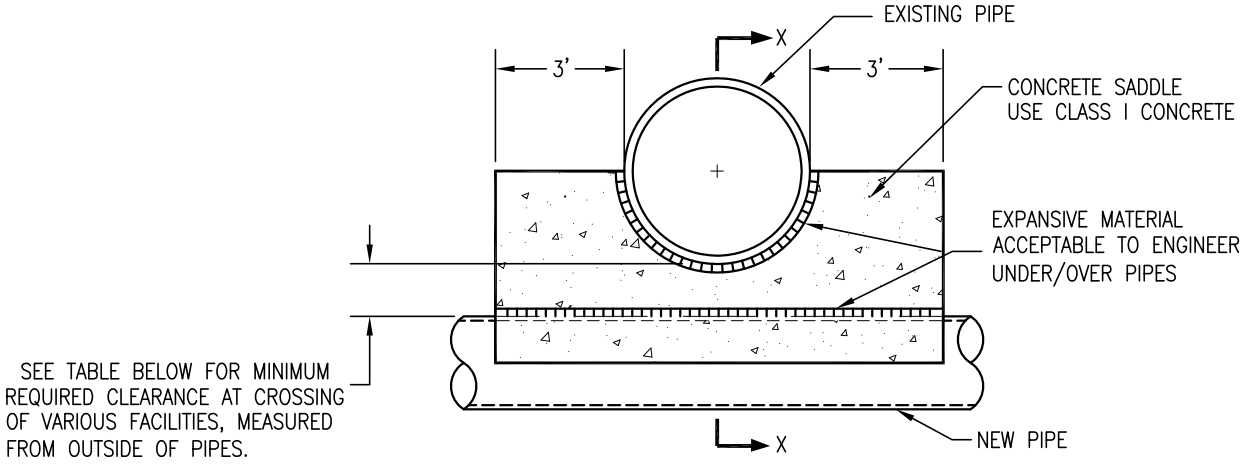

PROFILE VIEW
NO SCALE

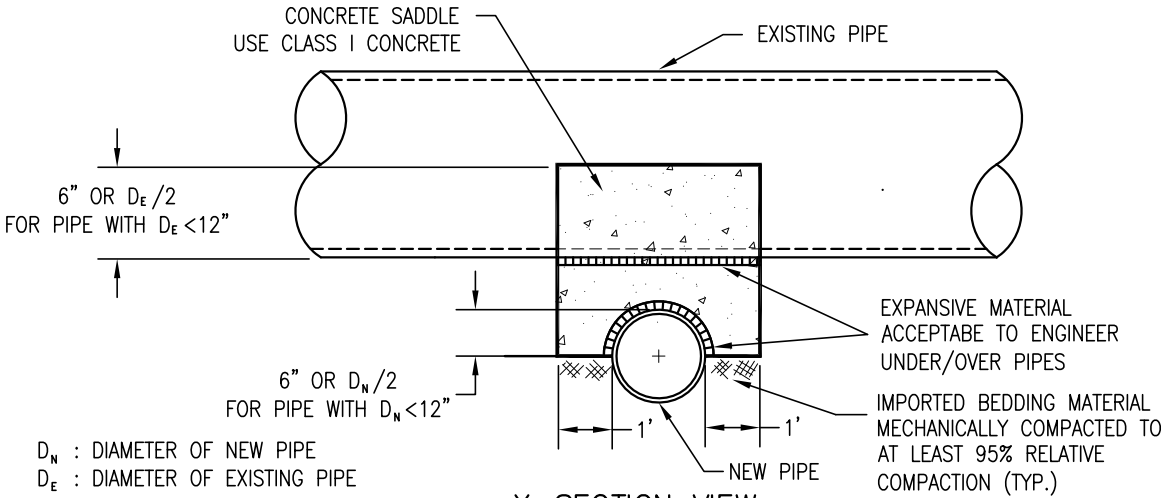

X–SECTION VIEW
NO SCALE

NOTE: INSTALL CONCRETE SADDLE AT EACH LOCATION WHERE A NEW UTILITY CROSSES AN EXISTING UTILITY WITH LESS THAN 12" CLEARANCE.

TABLE: CONCRETE SADDLE MINIMUM REQUIRED CLEARANCE (INCHES)

	WATER	RECYCLED WATER	SANITARY SEWER	STORM DRAIN	GAS	ELECTRIC	COMMUNICATIONS	OTHER
WATER	SEE NOTE 1	SEE NOTE 1	SEE NOTE 1	SEE NOTE 1	SEE NOTE 1	SEE NOTE 1	SEE NOTE 1	SEE NOTE 1
RECYCLED WATER	SEE NOTE 1	SEE NOTE 1	SEE NOTE 1	SEE NOTE 1	SEE NOTE 1	SEE NOTE 1	SEE NOTE 1	SEE NOTE 1
SANITARY SEWER	SEE NOTE 1	SEE NOTE 1	3	3	6	SEE NOTE 1	6	SEE NOTE 1
STORM DRAIN	SEE NOTE 1	SEE NOTE 1	3	3	6	SEE NOTE 1	6	SEE NOTE 1
GAS	SEE NOTE 1	SEE NOTE 1	6	6	3	SEE NOTE 1	6	SEE NOTE 1
ELECTRIC	SEE NOTE 1	SEE NOTE 1	SEE NOTE 1	SEE NOTE 1	SEE NOTE 1	SEE NOTE 1	SEE NOTE 1	SEE NOTE 1
COMMUNICATIONS	SEE NOTE 1	SEE NOTE 1	6	6	6	SEE NOTE 1	3	SEE NOTE 1
OTHER	SEE NOTE 1	SEE NOTE 1	SEE NOTE 1	SEE NOTE 1	SEE NOTE 1	SEE NOTE 1	SEE NOTE 1	SEE NOTE 1

NOTE 1: CHECK WITH SPECIFIC UTILITY DEPARTMENT/AGENCY FOR CONCRETE SADDLE MINIMUM REQUIRED CLEARANCE.

DRAWN BY: K. TRAN	CONCRETE SADDLE LOWER PIPE INSTALLATION	MI-4
CHECKED BY: F. AMIN		
APPROVED BY: G. GOMEZ		
DATE: OCTOBER 2013	CITY OF SANTA CLARA	PAGE: 82

Department of Public Works
City of Santa Clara, CA

STANDARD DETAILS

APPENDIX SECTION

AP-A

GENERAL NOTES

1. All materials and workmanship shall conform to the City's Standard Details, Standard Specifications, and General Requirements.

2. Contractor shall secure an Encroachment Permit from the City Engineering Department and pay appropriate fee prior to commencement of work. All work within the public right-of-way shall be done under a single Encroachment Permit.

3. It is the Contractor's responsibility to verify the location of all existing utilities with the appropriate utility agencies prior to the commencement of construction. Contractor shall notify all public and private utility owners 48 hours prior to commencement of work adjacent to the utility. Contact Underground Service Alert (USA) at 811 or 800-227-2600.

4. The Contractor shall notify, by circular, all business establishments and residences located in areas affected by the work at least forty-eight (48) hours prior to start of construction. Circular shall be subject to the approval of the City Engineer.

5. Unless otherwise directed by the City Engineer in the field: at each location where new curb/gutter is to be installed on an existing street (driveway installation, driveway abandonment, curb ramp installation, curb face drainage installation, etc.) pavement reconstruction shall be required. An 18-inch wide band of pavement shall be removed and replaced along the entire length of curb/gutter installation. Removal depth (saw cuts required) shall be to the base material on streets with A.C. or P.C.C. pavement four (4) inches or less in thickness. Removal depth shall be two (2) inches minimum on streets with A.C. (grind) and four (4) inches minimum on streets with P.C.C. (saw cut) pavement thickness greater than four (4) inches. Replace with A.C. or P.C.C. (dowels required) to match existing pavement.

6. All sidewalk, curb, and gutter damaged as a result of the project shall be removed and replaced to the nearest score mark or as directed by the City Engineer. Installation of new sidewalk, curb and gutter against existing improvements shall require a sidewalk contact joint (dowels required).

7. Partial replacement of a driveway is not allowed. A driveway that has been cut or damaged must be replaced in its entirety. The new replacement driveway must meet current City Standards which may affect on-site improvements and/or require a sidewalk easement.

8. Slurry seal shall be required on all new street pavement (e.g., trench work, potholes, and street widenings). Slurry seal shall extend twelve inches beyond the limit of pavement reconstruction.

9. All manholes, valve boxes, monument boxes, and other structures in the pavement area shall be adjusted to finish grade before paving final lift.

10. Grade breaks on curbs and sidewalks are to be rounded off on form work and finished surfacing.

11. The Contractor shall be responsible for the preservation and/or perpetuation of existing survey monuments (curb tags, iron pipes, street monuments, etc.) noted on the plans or found during construction per Section 8771 of the California Business and Professions Code. If a survey monument has the potential of being disturbed or within 3 feet of the Work, the monument shall be located, referenced, and a corner record shall be filed with the Santa Clara County Surveyor, and a duplicate of the corner record shall be submitted to the City Engineer prior to the start of construction. Should any survey monument be damaged or destroyed during construction, the contractor shall re-establish said monument per City standard, file a corner record with the Santa Clara County Surveyor, and submit a duplicate of the corner record to the City Engineer prior to final project notice of completion issued by the Department of Public Works. The contractor shall, at his/her expense, hire a licensed professional civil engineer authorized to practice land surveying or land surveyor to perform the work.

12. All surplus and unsuitable material shall be removed from public right-of-way.

13. Contractor shall provide adequate dust control and keep mud and debris off the public right-of-way at all times.

14. All trenches and excavations shall be constructed in strict compliance with the applicable sections of California and Federal O.S.H.A. requirements and other applicable safety ordinances. Contractor shall bear full responsibility for trench shoring design and installation.

15. Existing utilities shown are based upon record information and are approximate in location and depth. The Contractor shall pothole all existing utilities that may be affected by new facilities in this contract, verify actual location and depth, and report potential conflicts to the Engineer prior to excavating for new facilities.

16. Contractor shall perform his construction and operation in a manner, which will not allow harmful pollutants to enter the storm drain system. To ensure compliance, the Contractor shall implement the appropriate Best Management Practice (BMP) as outlined in the brochures entitled "Best Management Practice for the Construction Industry" issued by the Santa Clara Valley Nonpoint Source Pollution Control Program, to suit the construction site and job condition.

17. Overnight parking of construction equipment in the public right-of-way shall not be permitted, except at location(s) approved by the City Traffic Engineer.

18. All sanitary sewer and/or storm drain mains to be abandoned shall be filled with sand or control density fill (CDF) and plugged at each end with a 6" thick wall of Class "A" P.C.C.

19. Abandonment of sanitary sewer lateral at the property line shall include the complete removal of the Christy Box, all vertical pipes and the 45° Wye. The remaining lateral ends shall be plugged with 6" thick wall of Class "A" P.C.C., ensuring no concrete enters the main. Abandonment of sanitary sewer lateral at the main will occur when lateral connects at a manhole or as determined by the City. Plug the lateral end with 6" thick wall of Class "A" P.C.C., and fill lateral with sand or control density fill (CDF), making a smooth trowel finish on the inside wall of the manhole for manhole connections.

20. Unless otherwise noted, Class 2 A.B. under curb, gutter, and street sections paved with asphalt concrete shall be compacted to 95% relative compaction (minimum).

21. Near completion of the Project, contractor shall replace damaged curb and gutter along Project frontage as directed by the City Engineer.