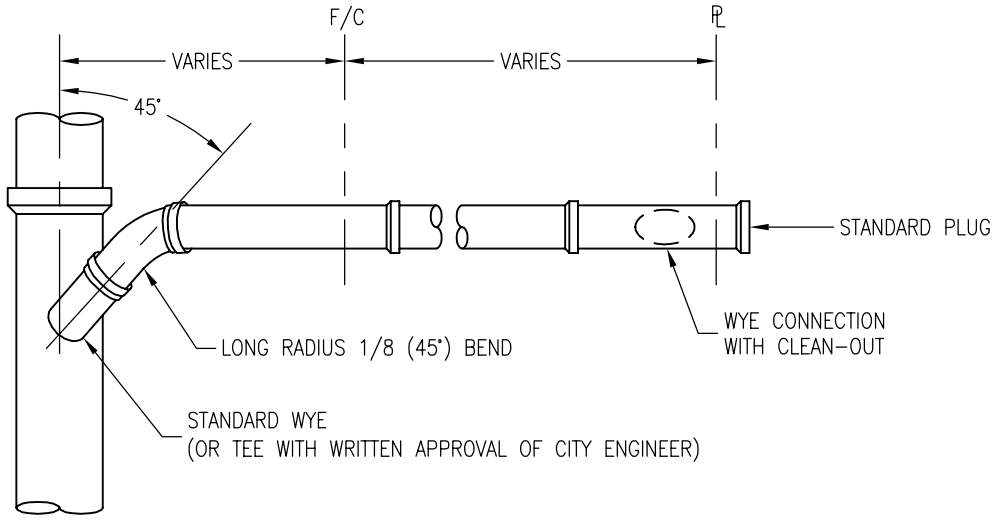

PLAN VIEW
NO SCALE

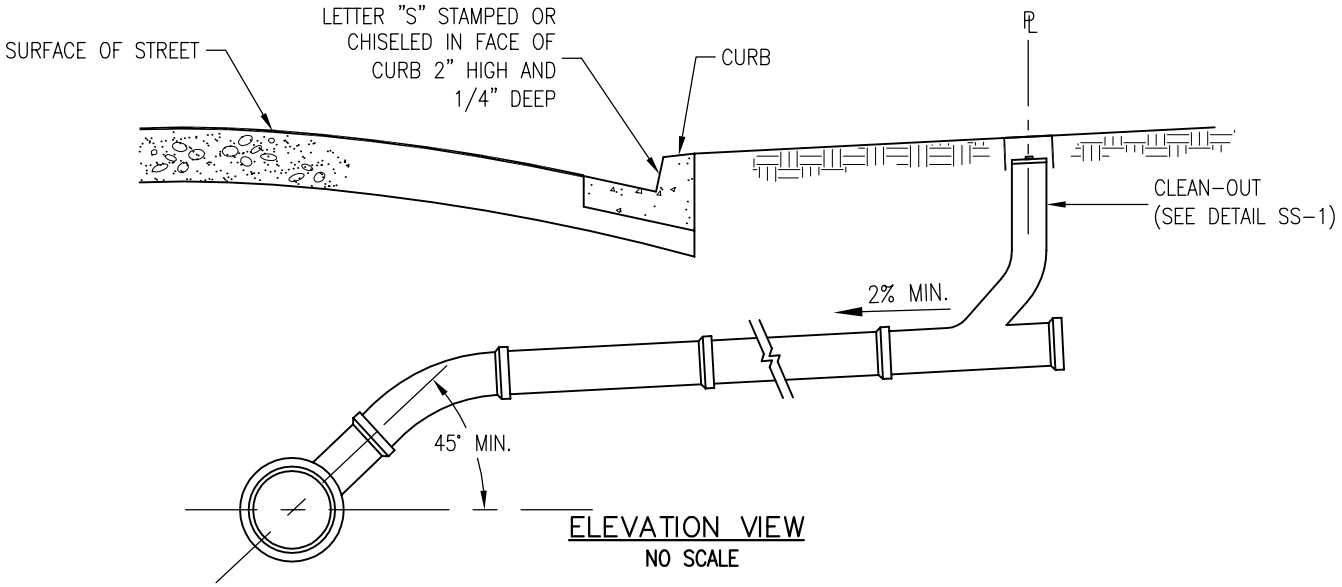

ELEVATION VIEW
NO SCALE

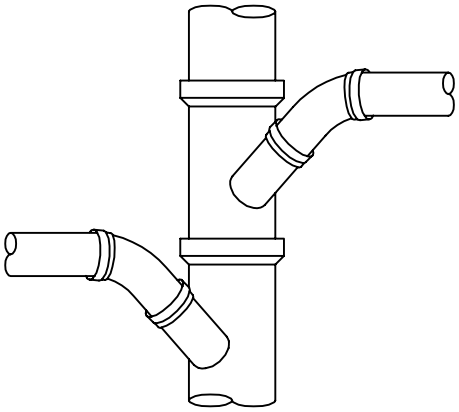

OPPOSITE LATERALS – PLAN VIEW
NO SCALE

NOTES:

1. IN NO CASE SHALL A LATERAL CONNECT TO THE SANITARY SEWER MAIN DIRECTLY ON TOP OF THE PIPE.
2. ONLY ONE CONNECTION MAY BE MADE IN EACH SECTION OF SANITARY SEWER MAIN.
3. SANITARY SEWER LATERALS SHALL HAVE A MINIMUM SLOPE OF 2%.
4. ALL LATERAL PIPE JOINTS SHALL BE COMPRESSION TYPE.
5. LATERAL SHALL EXTEND TO PROPERTY LINE UNLESS OTHERWISE NOTED, AND A CLEANOUT SHALL BE INSTALLED AT THE PROPERTY LINE. (SEE DETAIL SS-1)

DRAWN BY: M. LEE	SANITARY SEWER LATERAL CONNECTION	SS-2
CHECKED BY: S. THACH		
APPROVED BY: T. SUPAN		
DATE: AUGUST 2006	CITY OF SANTA CLARA	PAGE: 29