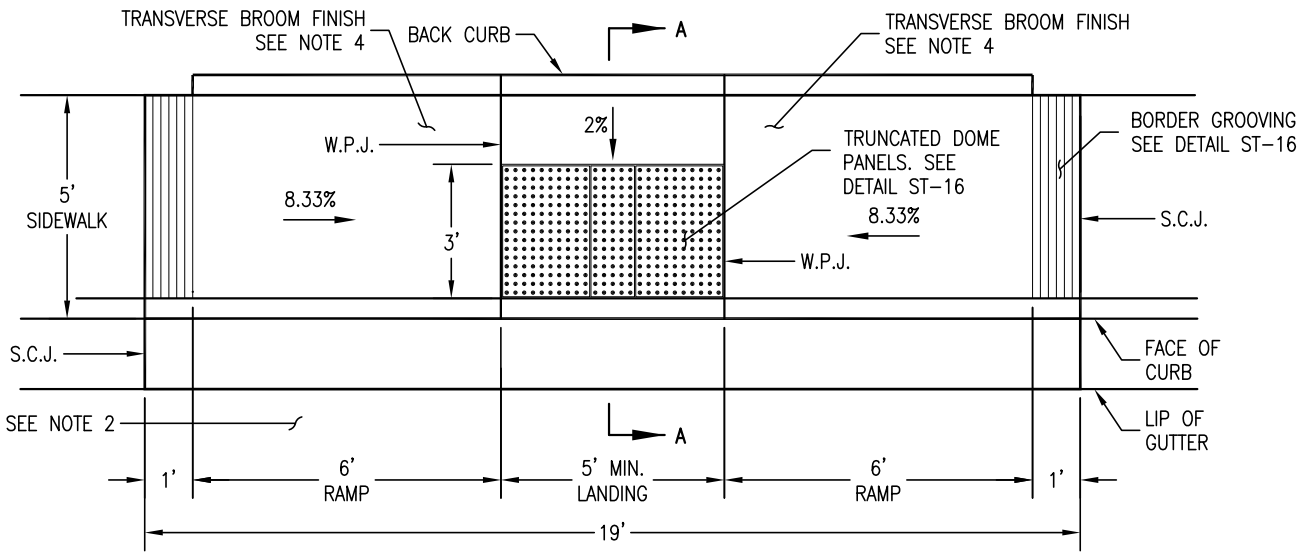

PLAN VIEW
NO SCALE

S.C.J. = SIDEWALK CONTACT JOINT
W.P.J. = WEAKENED PLANE JOINT

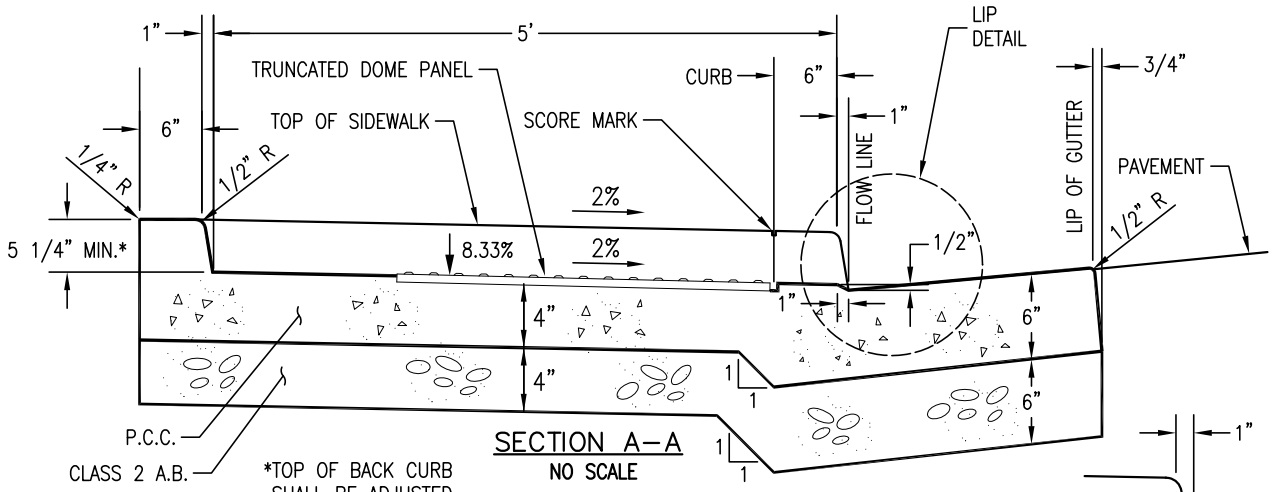

SECTION A–A
NO SCALE

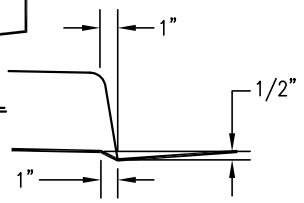

LIP DETAIL
NO SCALE

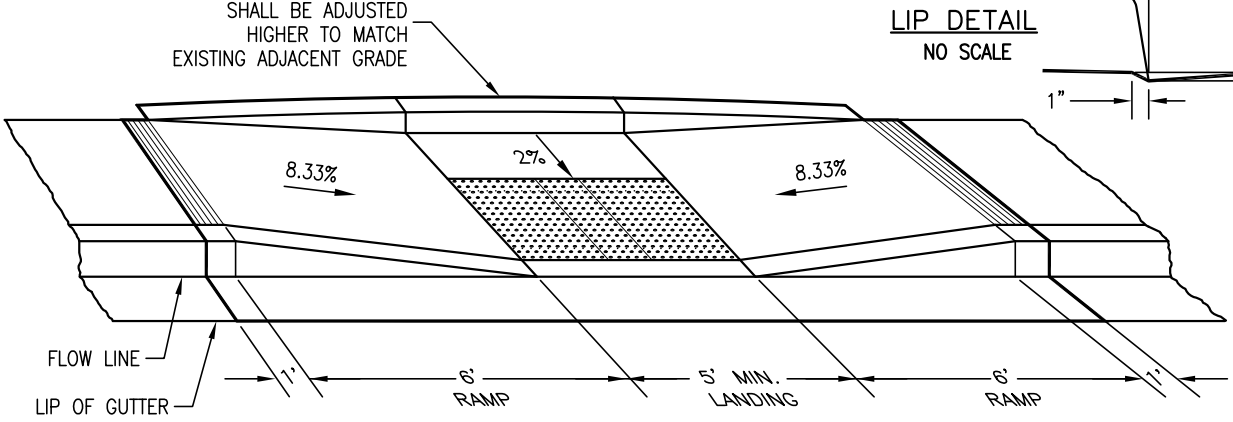

ELEVATION VIEW
NO SCALE

NOTES:

1. CURB RAMPS SHALL HAVE DETECTABLE WARNING SURFACES (GROOVING AND TRUNCATED DOMES). SEE DETAIL ST–16 FOR GROOVING DETAILS AND TRUNCATED DOME DETAILS.
2. 18" WIDE BAND OF PAVEMENT SHALL BE REMOVED AND REPLACED. SEE NOTE 5 OF GENERAL NOTES (APPENDIX) FOR REQUIREMENTS.
3. CURB RAMPS FOR SEPARATED SIDEWALKS SHALL BE DESIGNED ON AN INDIVIDUAL BASIS.
4. THE SURFACE OF RAMP SHALL HAVE A TRANSVERSE BROOMED SURFACE TEXTURE ROUGHER THAN THE SURROUNDING SIDEWALK.

DRAWN BY: K. TRAN	STRAIGHT CURB RAMP	ST-15
CHECKED BY: F. AMIN		
APPROVED BY: G. GOMEZ		
DATE: OCTOBER 2013	CITY OF SANTA CLARA	PAGE: 15